Internal Use Only

http://biz.lgservice.com

MULTI V™ III

Outdoor Unit R410A

SERVICE MANUAL (Exploded View)

MODEL : ARUB Series (Heat Recovery)

CAUTION

Before Servicing the unit, read the safety precautions in General SVC manual.
Only for authorized service personnel.

ARUB Series

1. Specifications 3
2. Functions 9
3. Dimensions 10
4. Piping Diagrams 16
5. Wiring Diagrams 30
6. Exploded View 35

Copyright ©2011 LG Electronics. Inc. All right reserved.
Only for training and service purposes

LGE Internal Use Only

1. Specifications

Heat Recovery

Heat Recovery(460V, 60Hz)

Chassis			UX2'	UX3'	UX3'
HP			8	10	12
Ton			6	8	10
Model Name		Combination Unit	ARUB072DT3	ARUB096DT3	ARUB121DT3
		Independent Unit			
Capacity	Cooling Nominal	Btu/h	72,000	96,000	120,000
	Cooling Rated		69,000	92,000	114,000
	Heating Nominal	Btu/h	81,000	108,000	135,000
	Heating Rated		77,000	103,000	129,000
Casing Color			Warm GrayMorning Gray	Warm GrayMorning Gray	Warm GrayMorning Gray
Heat Exchanger			Gold fin	Gold fin	Gold fin
Compressor	Type		HSS DC Scroll	HSS DC Scroll	HSS DC Scroll
	Piston Displacement	cm^2/rev	50.2	50.2+66.49	50.2+66.49
	Number of Revolution(@60Hz)	R.P.M	3,600	3,600+3,488	3,600+3,488
	Motor Output x Number	W	5,143x1	(5,143+4,950) x 1	(5,143+4,950) x 1
	Starting Method		Inverter	Inverter,Direct On Line	Inverter,Direct On Line
	Inverter operation range	Hz	20~120	20~120	20~120
	Oil Type		FVC68D(PVE)	FVC68D(PVE)	FVC68D(PVE)
	Oil Charge	L	3,500	5,500	5,500
Fan	Type		Propeller fan	Propeller fan	Propeller fan
	Motor Output x Number	W	750 x 1	600 x 2	600 x 2
	Air Flow Rate(High)	CMM	180	210	240
		cfm	6,300	7,400	8,500
	Drive		DC INVERTER	DC INVERTER	DC INVERTER
	Discharge	Side / Top	TOP	TOP	TOP
Pipe Connctions	Liquid Pipes	mm(inch)	9.52(3/8)	9.52(3/8)	12.7(1/2)
	Low Pressure Gas Pipes	mm(inch)	19.05(3/4)	22.2(7/8)	28.58(1 1/8)
	High Pressure Gas Pipes	mm(inch)	15.88(5/8)	19.05(3/4)	19.05(3/4)
Dimensions(WxHxD)		mm	(920×1,680×760)×1	(1,240×1,680×760)×1	(1,240×1,680×760)×1
		inch	(36.2×66.1×29.9)×1	(48.8×66.1×29.9)×1	(48.8×66.1×29.9)×1
Net Weight		kg	(190 x 1)	(280 x 1)	(280 x 1)
		lbs	(418 x 1)	(617 x 1)	(617 x 1)
Gross Weight		kg	(200 x 1)	(295 x 1)	(295 x 1)
		lbs	(441 x 1)	(650 x 1)	(650 x 1)
Transmission Cable		mm^2(VCTF-SB)	1.0 ~ 1.5 x 2C	1.0 ~ 1.5 x 2C	1.0 ~ 1.5 x 2C
Refigerant	Refigerant name		R410A	R410A	R410A
	Control		EEV	EEV	EEV
Power Supply		Ø , V, Hz	3, 460, 60	3, 460, 60	3, 460, 60

Notes:

1. Capacities are based on the following conditions:
   - Cooling: - Indoor Temperature 27°C(80.6°F) DB/19°C(66.2°F) WB
     - Outdoor Temperature 35°C(95°F) DB/24°C(75.2°F) WB
   - Heating: - Indoor Temperature 20°C(68°F) DB/15°C(59°F) WB
     - Outdoor Temperature 7°C(44.6°F) DB/6°C(42.8°F) WB
   - Piping Length - Interconnecting Piping Length 7.5m
     - Level Difference of Zero
2. Capacities are net capacities
3. EEV : Electronic Expansion Valve
4. Wiring cable size must comply with the applicable local and national code.
5. Due to our policy of innovation some specifications may be changed without prior notification

Conversion Formula
RT = kW x 0.284
kcal/h = kW x 860
Btu/h = kW x 3412
CFM = m^3/min x 35.3

Copyright ©2011 LG Electronics. Inc. All right reserved.
Only for training and service purposes

LGE Internal Use Only

Heat Recovery(460V, 60Hz)

Chassis			UX3'	UX2'+UX3'	UX2'+UX3'
HP			14	18	20
Ton			12	14	16
Model Name		Combination Unit	ARUB144DT3	ARUB168DT3	ARUB192DT3
		Independent Unit		ARUB072DT3 ARUB096DT3	ARUB072DT3 ARUB121DT3
Capacity	Cooling Nominal	Btu/h	144,000	168,000	192,000
	Cooling Rated		138,000	160,000	184,000
	Heating Nominal	Btu/h	162,000	189,000	216,000
	Heating Rated		154,000	180,000	206,000
Casing Color			Warm GrayMorning Gray	Warm GrayMorning Gray	Warm GrayMorning Gray
Heat Exchanger			Gold fin	Gold fin	Gold fin
Compressor	Type		HSS DC Scroll	HSS DC Scroll	HSS DC Scroll
	Piston Displacement	cm^2/rev	50.2+66.49	50.2 + (50.2+66.49)	50.2 + (50.2+66.49)
	Number of Revolution(@60Hz)	R.P.M	3,600+3,488	3,600 + (3,600+3,488)	3,600 + (3,600+3,488)
	Motor Output x Number	W	(5,143+4,950) x 1	5,143 + (5,143+4,950)x1	5,143 + (5,143+4,950)x1
	Starting Method		Inverter,Direct On Line	Inverter,Direct On Line	Inverter,Direct On Line
	Inverter operation range	Hz	20~120	20~120	20~120
	Oil Type		FVC68D(PVE)	FVC68D(PVE)	FVC68D(PVE)
	Oil Charge	L	5,500	9,000	9,000
Fan	Type		Propeller fan	Propeller fan	Propeller fan
	Motor Output x Number	W	600 x 2	750 + (600 x 2)	750 + (600 x 2)
	Air Flow Rate(High)	CMM	250	390	420
		cfm	8,800	13,700	14,800
	Drive		DC INVERTER	DC INVERTER	DC INVERTER
	Discharge	Side / Top	TOP	TOP	TOP
Pipe Connctions	Liquid Pipes	mm(inch)	12.7(1/2)	15.88(5/8)	15.88(5/8)
	Low Pressure Gas Pipes	mm(inch)	28.58(1 1/8)	28.58(1 1/8)	28.58(1 1/8)
	High Pressure Gas Pipes	mm(inch)	22.2(7/8)	22.2(7/8)	22.2(7/8)
Dimensions(WxHxD)		mm	(1,240×1,680×760)×1	(920×1,680×760)×1 (1,240×1,680×760)×1	(920×1,680×760)×1 (1,240×1,680×760)×1
		inch	(48.8×66.1×29.9)×1	(36.2×66.1×29.9)×1 (48.8×66.1×29.9)×1	(36.2×66.1×29.9)×1 (48.8×66.1×29.9)×1
Net Weight		kg	(280 x 1)	(190 x 1) + (280 x 1)	(190 x 1) + (280 x 1)
		lbs	(617 x 1)	(418 x 1) + (617 x 1)	(418 x 1) + (617 x 1)
Gross Weight		kg	(295 x 1)	(200 x 1) + (295 x 1)	(200 x 1) + (295 x 1)
		lbs	(650 x 1)	(441 x 1) + (650 x 1)	(441 x 1) + (650 x 1)
Transmission Cable		mm^2(VCTF-SB)	1.0 ~ 1.5 x 2C	1.0 ~ 1.5 x 2C	1.0 ~ 1.5 x 2C
Refigerant	Refigerant name		R410A	R410A	R410A
	Control		EEV	EEV	EEV
Power Supply		Ø , V, Hz	3, 460, 60	3, 208/230, 60	3, 208/230, 60

Notes:

1. Capacities are based on the following conditions:
   - Cooling: - Indoor Temperature 27°C(80.6°F) DB/19°C(66.2°F) WB
     - Outdoor Temperature 35°C(95°F) DB/24°C(75.2°F) WB
   - Heating: - Indoor Temperature 20°C(68°F) DB/15°C(59°F) WB
     - Outdoor Temperature 7°C(44.6°F) DB/6°C(42.8°F) WB
   - Piping Length - Interconnecting Piping Length 7.5m
     - Level Difference of Zero
2. Capacities are net capacities
3. EEV : Electronic Expansion Valve
4. Wiring cable size must comply with the applicable local and national code.
5. Due to our policy of innovation some specifications may be changed without prior notification

Conversion Formula
RT = kW x 0.284
kcal/h = kW x 860
Btu/h = kW x 3412
CFM = m^3/min x 35.3

Copyright ©2011 LG Electronics. Inc. All right reserved.
Only for training and service purposes

LGE Internal Use Only

Heat Recovery(460V, 60Hz)

Chassis			UX2'+UX3'	UX3'+UX3'	UX3'+UX3'
HP			22	24	26
Ton			18	20	22
Model Name		Combination Unit	ARUB216DT3	ARUB240DT3	ARUB264DT3
		Independent Unit	ARUB072DT3 ARUB144DT3	ARUB096DT3 ARUB144DT3	ARUB121DT3 ARUB144DT3
Capacity	Cooling Nominal	Btu/h	216,000	240,000	264,000
	Cooling Rated		206,000	228,000	250,000
	Heating Nominal	Btu/h	243,000	270,000	297,000
	Heating Rated		230,000	256,000	282,000
Casing Color			Warm GrayMorning Gray	Warm GrayMorning Gray	Warm GrayMorning Gray
Heat Exchanger			Gold fin	Gold fin	Gold fin
Compressor	Type		HSS DC Scroll	HSS DC Scroll	HSS DC Scroll
	Piston Displacement	cm^2/rev	50.2 + (50.2+66.49)	(50.2+66.49) x 2	(50.2+66.49) x 2
	Number of Revolution(@60Hz)	R.P.M	3,600 + (3,600+3,488)	(3,600+3,488) x 2	(3,600+3,488) x 2
	Motor Output x Number	W	5,143 + (5,143+4,950)x2	(5,143+4,950)x2	(5,143+4,950)x2
	Starting Method		Inverter,Direct On Line	Inverter,Direct On Line	Inverter,Direct On Line
	Inverter operation range	Hz	20~120	20~120	20~120
	Oil Type		FVC68D(PVE)	FVC68D(PVE)	FVC68D(PVE)
	Oil Charge	L	9,000	11,000	11,000
Fan	Type		Propeller fan	Propeller fan	Propeller fan
	Motor Output x Number	W	750 + (600 x 2)	(600 x 2) x 2	(600 x 2) x 2
	Air Flow Rate(High)	CMM	430	460	490
		cfm	15,100	16,200	17,300
	Drive		DC INVERTER	DC INVERTER	DC INVERTER
	Discharge	Side / Top	TOP	TOP	TOP
Pipe Connctions	Liquid Pipes	mm(inch)	15.88(5/8)	15.88(5/8)	19.05(3/4)
	Low Pressure Gas Pipes	mm(inch)	28.58(1 1/8)	34.9(1 3/8)	34.9(1 3/8)
	High Pressure Gas Pipes	mm(inch)	28.58(1 1/8)	28.58(1 1/8)	28.58(1 1/8)
Dimensions(WxHxD)		mm	(920×1,680×760)×1 (1,240×1,680×760)×1	(1,240×1,680×760)×2	(1,240×1,680×760)×2
		inch	(36.2×66.1×29.9)×1 (48.8×66.1×29.9)×1	(48.8×66.1×29.9)×2	(48.8×66.1×29.9)×2
Net Weight		kg	(190 x 1) + (280 x 1)	(280 x 2)	(280 x 2)
		lbs	(418 x 1) + (617 x 1)	(617 x 2)	(617 x 2)
Gross Weight		kg	(200 x 1) + (295 x 1)	(295 x 2)	(295 x 2)
		lbs	(441 x 1) + (650 x 1)	(650 x 2)	(650 x 2)
Transmission Cable		mm^2(VCTF-SB)	1.0 ~ 1.5 x 2C	1.0 ~ 1.5 x 2C	1.0 ~ 1.5 x 2C
Refigerant	Refigerant name		R410A	R410A	R410A
	Control		EEV	EEV	EEV
Power Supply		Ø , V, Hz	3, 208/230, 60	3, 208/230, 60	3, 208/230, 60

Notes:

1. Capacities are based on the following conditions:
   - Cooling: - Indoor Temperature 27°C(80.6°F) DB/19°C(66.2°F) WB
     - Outdoor Temperature 35°C(95°F) DB/24°C(75.2°F) WB
   - Heating: - Indoor Temperature 20°C(68°F) DB/15°C(59°F) WB
     - Outdoor Temperature 7°C(44.6°F) DB/6°C(42.8°F) WB
   - Piping Length - Interconnecting Piping Length 7.5m
     - Level Difference of Zero
2. Capacities are net capacities
3. EEV : Electronic Expansion Valve
4. Wiring cable size must comply with the applicable local and national code.
5. Due to our policy of innovation some specifications may be changed without prior notification

Conversion Formula
RT = kW x 0.284
kcal/h = kW x 860
Btu/h = kW x 3412
CFM = m^3/min x 35.3

Copyright ©2011 LG Electronics. Inc. All right reserved.
Only for training and service purposes

LGE Internal Use Only

Heat Recovery(460V, 60Hz)

Chassis			UX3'+UX3'	UX2'+UX3'+UX3'	UX2'+UX3'+UX3'
HP			28	32	34
Ton			24	26	28
Model Name		Combination Unit	ARUB288DT3	ARUB312DT3	ARUB336DT3
		Independent Unit	ARUB144DT3 ARUB144DT3	ARUB072DT3 ARUB096DT3 ARUB144DT3	ARUB072DT3 ARUB121DT3 ARUB144DT3
Capacity	Cooling Nominal	Btu/h	288,000	312,000	336,000
	Cooling Rated		274,000	296,000	320,000
	Heating Nominal	Btu/h	324,000	351,000	378,000
	Heating Rated		308,000	334,000	361,000
Casing Color			Warm GrayMorning Gray	Warm GrayMorning Gray	Warm GrayMorning Gray
Heat Exchanger			Gold fin	Gold fin	Gold fin
Compressor	Type		HSS DC Scroll	HSS DC Scroll	HSS DC Scroll
	Piston Displacement	cm^2/rev	(50.2+66.49) x 2	50.2 + (50.2+66.49) x 2	50.2 + (50.2+66.49) x 2
	Number of Revolution(@60Hz)	R.P.M	(3,600+3,488) x 2	3,600 + (3,600+3,488) x 2	3,600 + (3,600+3,488) x 2
	Motor Output x Number	W	(5,143+4,950)x2	5,143 + (5,143+4,950) x 2	5,143 + (5,143+4,950) x 2
	Starting Method		Inverter,Direct On Line	Inverter,Direct On Line	Inverter,Direct On Line
	Inverter operation range	Hz	20~120	20~120	20~120
	Oil Type		FVC68D(PVE)	FVC68D(PVE)	FVC68D(PVE)
	Oil Charge	L	11,000	14,500	14,500
Fan	Type		Propeller fan	Propeller fan	Propeller fan
	Motor Output x Number	W	(600 x 2) x 2	750 + (600 x 2) x 2	750 + (600 x 2) x 2
	Air Flow Rate(High)	CMM	500	640	670
		cfm	17,600	22,500	23,600
	Drive		DC INVERTER	DC INVERTER	DC INVERTER
	Discharge	Side / Top	TOP	TOP	TOP
Pipe Connctions	Liquid Pipes	mm(inch)	19.05(3/4)	19.05(3/4)	19.05(3/4)
	Low Pressure Gas Pipes	mm(inch)	34.9(1 3/8)	34.9(1 3/8)	34.9(1 3/8)
	High Pressure Gas Pipes	mm(inch)	28.58(1 1/8)	28.58(1 1/8)	28.58(1 1/8)
Dimensions(WxHxD)		mm	(1,240×1,680×760)×2	(920×1,680×760)×1 (1,240×1,680×760)×2	(920×1,680×760)×1 (1,240×1,680×760)×2
		inch	(48.8×66.1×29.9)×2	(36.2×66.1×29.9)×1 (48.8×66.1×29.9)×2	(36.2×66.1×29.9)×1 (48.8×66.1×29.9)×2
Net Weight		kg	(280 x 2)	(190 x 1) + (280 x 2)	(190 x 1) + (280 x 2)
		lbs	(617 x 2)	(418 x 1) + (617 x 2)	(418 x 1) + (617 x 2)
Gross Weight		kg	(295 x 2)	(200 x 1) + (295 x 2)	(200 x 1) + (295 x 2)
		lbs	(650 x 2)	(441 x 1) + (650 x 2)	(441 x 1) + (650 x 2)
Transmission Cable		mm^2(VCTF-SB)	1.0 ~ 1.5 x 2C	1.0 ~ 1.5 x 2C	1.0 ~ 1.5 x 2C
Refigerant	Refigerant name		R410A	R410A	R410A
	Control		EEV	EEV	EEV
Power Supply		Ø , V, Hz	3, 208/230, 60	3, 208/230, 60	3, 208/230, 60

Notes:

1. Capacities are based on the following conditions:
   - Cooling: - Indoor Temperature 27°C(80.6°F) DB/19°C(66.2°F) WB
     - Outdoor Temperature 35°C(95°F) DB/24°C(75.2°F) WB
   - Heating: - Indoor Temperature 20°C(68°F) DB/15°C(59°F) WB
     - Outdoor Temperature 7°C(44.6°F) DB/6°C(42.8°F) WB
   - Piping Length - Interconnecting Piping Length 7.5m
     - Level Difference of Zero
2. Capacities are net capacities
3. EEV : Electronic Expansion Valve
4. Wiring cable size must comply with the applicable local and national code.
5. Due to our policy of innovation some specifications may be changed without prior notification

Conversion Formula
RT = kW x 0.284
kcal/h = kW x 860
Btu/h = kW x 3412
CFM = m^3/min x 35.3

Copyright ©2011 LG Electronics. Inc. All right reserved.
Only for training and service purposes

LGE Internal Use Only

Heat Recovery(460V, 60Hz)

Chassis			UX2'+UX3'+UX3'	UX3'+UX3'+UX3'	UX3'+UX3'+UX3'
HP			36	38	40
Ton			30	32	34
Model Name		Combination Unit	ARUB360DT3	ARUB384DT3	ARUB408DT3
		Independent Unit	ARUB072DT3 ARUB144DT3 ARUB144DT3	ARUB096DT3 ARUB144DT3 ARUB144DT3	ARUB121DT3 ARUB144DT3 ARUB144DT3
Capacity	Cooling Nominal	Btu/h	360,000	384,000	408,000
	Cooling Rated		342,000	366,000	390,000
	Heating Nominal	Btu/h	405,000	432,000	459,000
	Heating Rated		387,000	412,000	437,000
Casing Color			Warm GrayMorning Gray	Warm GrayMorning Gray	Warm GrayMorning Gray
Heat Exchanger			Gold fin	Gold fin	Gold fin
Compressor	Type		HSS DC Scroll	HSS DC Scroll	HSS DC Scroll
	Piston Displacement	cm^2/rev	50.2 + (50.2+66.49) x 2	(50.2+66.49) x 3	(50.2+66.49) x 3
	Number of Revolution(@60Hz)	R.P.M	3,600 + (3,600+3,488) x 2	(3,600+3,488) x 3	(3,600+3,488) x 3
	Motor Output x Number	W	5,143 + (5,143+4,950) x 2	(5,143+4,950) x 3	(5,143+4,950) x 3
	Starting Method		Inverter,Direct On Line	Inverter,Direct On Line	Inverter,Direct On Line
	Inverter operation range	Hz	20~120	20~120	20~120
	Oil Type		FVC68D(PVE)	FVC68D(PVE)	FVC68D(PVE)
	Oil Charge	L	14,500	16,500	16,500
Fan	Type		Propeller fan	Propeller fan	Propeller fan
	Motor Output x Number	W	750 + (600 x 2) x 2	(600 x 2) x 3	(600 x 2) x 3
	Air Flow Rate(High)	CMM	680	710	740
		cfm	23,900	25,000	26,100
	Drive		DC INVERTER	DC INVERTER	DC INVERTER
	Discharge	Side / Top	TOP	TOP	TOP
Pipe Connctions	Liquid Pipes	mm(inch)	19.05(3/4)	19.05(3/4)	19.05(3/4)
	Low Pressure Gas Pipes	mm(inch)	41.3(1 5/8)	41.3(1 5/8)	41.3(1 5/8)
	High Pressure Gas Pipes	mm(inch)	28.58(1 1/8)	34.9(1 3/8)	34.9(1 3/8)
Dimensions(WxHxD)		mm	(920×1,680×760)×1 (1,240×1,680×760)×2	(1,240×1,680×760)×3	(1,240×1,680×760)×3
		inch	(36.2×66.1×29.9)×1 (48.8×66.1×29.9)×2	(48.8×66.1×29.9)×3	(48.8×66.1×29.9)×3
Net Weight		kg	(190 x 1) + (280 x 2)	(280 x 3)	(280 x 3)
		lbs	(418 x 1) + (617 x 2)	(617 x 3)	(617 x 3)
Gross Weight		kg	(200 x 1) + (295 x 2)	(295 x 3)	(295 x 3)
		lbs	(441 x 1) + (650 x 2)	(650 x 3)	(650 x 3)
Transmission Cable		mm^2(VCTF-SB)	1.0 ~ 1.5 x 2C	1.0 ~ 1.5 x 2C	1.0 ~ 1.5 x 2C
Refigerant	Refigerant name		R410A	R410A	R410A
	Control		EEV	EEV	EEV
Power Supply		Ø , V, Hz	3, 208/230, 60	3, 208/230, 60	3, 208/230, 60

Notes:

1. Capacities are based on the following conditions:
   - Cooling: - Indoor Temperature 27°C(80.6°F) DB/19°C(66.2°F) WB
     - Outdoor Temperature 35°C(95°F) DB/24°C(75.2°F) WB
   - Heating: - Indoor Temperature 20°C(68°F) DB/15°C(59°F) WB
     - Outdoor Temperature 7°C(44.6°F) DB/6°C(42.8°F) WB
   - Piping Length - Interconnecting Piping Length 7.5m
     - Level Difference of Zero
2. Capacities are net capacities
3. EEV : Electronic Expansion Valve
4. Wiring cable size must comply with the applicable local and national code.
5. Due to our policy of innovation some specifications may be changed without prior notification

Conversion Formula
RT = kW x 0.284
kcal/h = kW x 860
Btu/h = kW x 3412
CFM = m^3/min x 35.3

Copyright ©2011 LG Electronics. Inc. All right reserved.
Only for training and service purposes

LGE Internal Use Only

Heat Recovery(460V, 60Hz)

Chassis			UX3'+UX3'+UX3'
HP			42
Ton			36
Model Name		Combination Unit	ARUB432DT3
		Independent Unit	ARUB144DT3 ARUB144DT3 ARUB144DT3
Capacity	Cooling Nominal	Btu/h	432,000
	Cooling Rated		414,000
	Heating Nominal	Btu/h	486,000
	Heating Rated		462,000
Casing Color			Warm GrayMorning Gray
Heat Exchanger			Gold fin
Compressor	Type		HSS DC Scroll
	Piston Displacement	cm^2/rev	(50.2+66.49) x 3
	Number of Revolution(@60Hz)	R.P.M	(3,600+3,488) x 3
	Motor Output x Number	W	(5,143+4,950) x 3
	Starting Method		Inverter,Direct On Line
	Inverter operation range	Hz	20~120
	Oil Type		FVC68D(PVE)
	Oil Charge	L	16,500
Fan	Type		Propeller fan
	Motor Output x Number	W	(600 x 2) x 3
	Air Flow Rate(High)	CMM	750
		cfm	26,400
	Drive		DC INVERTER
	Discharge	Side / Top	TOP
Pipe Connctions	Liquid Pipes	mm(inch)	19.05(3/4)
	Low Pressure Gas Pipes	mm(inch)	41.3(1 5/8)
	High Pressure Gas Pipes	mm(inch)	34.9(1 3/8)
Dimensions(WxHxD)		mm	(1,240×1,680×760)×3
		inch	(48.8×66.1×29.9)×3
Net Weight		kg	(280 x 3)
		lbs	(617 x 3)
Gross Weight		kg	(295 x 3)
		lbs	(650 x 3)
Transmission Cable		mm^2(VCTF-SB)	1.0 ~ 1.5 x 2C
Refigerant	Refigerant name		R410A
	Control		EEV
Power Supply		Ø , V, Hz	3, 208/230, 60

Notes:

1. Capacities are based on the following conditions:
   - Cooling: - Indoor Temperature 27°C(80.6°F) DB/19°C(66.2°F) WB
     - Outdoor Temperature 35°C(95°F) DB/24°C(75.2°F) WB
   - Heating: - Indoor Temperature 20°C(68°F) DB/15°C(59°F) WB
     - Outdoor Temperature 7°C(44.6°F) DB/6°C(42.8°F) WB
   - Piping Length - Interconnecting Piping Length 7.5m
     - Level Difference of Zero
2. Capacities are net capacities
3. EEV : Electronic Expansion Valve
4. Wiring cable size must comply with the applicable local and national code.
5. Due to our policy of innovation some specifications may be changed without prior notification

Conversion Formula
RT = kW x 0.284
kcal/h = kW x 860
Btu/h = kW x 3412
CFM = m^3/min x 35.3

Copyright ©2011 LG Electronics. Inc. All right reserved.
Only for training and service purposes

LGE Internal Use Only

Heat Recovery

Heat Recovery(208/230V)

Chassis			UX2'	UX3'	UX3'
HP			8	10	12
Ton			6	8	10
Model Name		Combination Unit	ARUB072BT3	ARUB096BT3	ARUB121BT3
		Independent Unit			
Capacity	Cooling Nominal	Btu/h	72,000	96,000	120,000
	Cooling Rated		69,000	92,000	114,000
	Heating Nominal	Btu/h	81,000	108,000	135,000
	Heating Rated		77,000	103,000	129,000
Casing Color			Warm Gray Morning Gray	Warm Gray Morning Gray	Warm Gray Morning Gray
Heat Exchanger			Gold fin	Gold fin	Gold fin
Compressor	Type		HSS DC Scroll	HSS DC Scroll	HSS DC Scroll
	Piston Displacement	cm^2/rev	50.2	50.2+66.49	50.2+66.49
	Number of Revolution(@60Hz)	R.P.M	3,600	3,600+3,488	3,600+3,488
	Motor Output x Number	W	5,143x1	(5,143+4,950) x 1	(5,143+4,950) x 1
	Starting Method		Inverter,Direct On Line	Inverter,Direct On Line	Inverter,Direct On Line
	Inverter operation range	Hz	20~120	20~120	20~120
	Oil Type		FVC68D(PVE)	FVC68D(PVE)	FVC68D(PVE)
	Oil Charge	L	3,500	5,500	5,500
Fan	Type		Propeller fan	Propeller fan	Propeller fan
	Motor Output x Number	W	750 x 1	600 x 2	600 x 2
	Air Flow Rate(High)	CMM	180	210	240
		cfm	6,300	7,400	8,500
	Drive		DC INVERTER	DC INVERTER	DC INVERTER
	Discharge	Side / Top	TOP	TOP	TOP
Pipe Connctions	Liquid Pipes	mm(inch)	9.52(3/8)	9.52(3/8)	12.7(1/2)
	Low Pressure Gas Pipes	mm(inch)	19.05(3/4)	22.2(7/8)	28.58(1 1/8)
	High Pressure Gas Pipes	mm(inch)	15.88(5/8)	19.05(3/4)	19.05(3/4)
Dimensions(WxHxD)		mm	(920×1,680×760)×1	(1,240×1,680×760)×1	(1,240×1,680×760)×1
		inch	(36.2×66.1×29.9)×1	(48.8×66.1×29.9)×1	(48.8×66.1×29.9)×1
Net Weight		kg	(190 x 1)	(280 x 1)	(280 x 1)
		lbs	(418 x 1)	(617 x 1)	(617 x 1)
Gross Weight		kg	(200 x 1)	(295 x 1)	(295 x 1)
		lbs	(441 x 1)	(650 x 1)	(650 x 1)
Transmission Cable		mm^2(VCTF-SB)	1.0 ~ 1.5 x 2C	1.0 ~ 1.5 x 2C	1.0 ~ 1.5 x 2C
Refigerant	Refigerant name		R410A	R410A	R410A
	Control		EEV	EEV	EEV
Power Supply		Ø , V, Hz	3, 208/230, 60	3, 208/230, 60	3, 208/230, 60

Notes:

1. Capacities are based on the following conditions:
   - Cooling: - Indoor Temperature 27°C(80.6°F) DB/19°C(66.2°F) WB
     - Outdoor Temperature 35°C(95°F) DB/24°C(75.2°F) WB
   - Heating: - Indoor Temperature 20°C(68°F) DB/15°C(59°F) WB
     - Outdoor Temperature 7°C(44.6°F) DB/6°C(42.8°F) WB
   - Piping Length - Interconnecting Piping Length 7.5m
     - Level Difference of Zero
2. Capacities are net capacities
3. EEV : Electronic Expansion Valve
4. Wiring cable size must comply with the applicable local and national code.
5. Due to our policy of innovation some specifications may be changed without prior notification

Conversion Formula
RT = kW x 0.284
kcal/h = kW x 860
Btu/h = kW x 3412
CFM = m^3/min x 35.3

Copyright ©2011 LG Electronics. Inc. All right reserved.
Only for training and service purposes

LGE Internal Use Only

Heat Recovery(208/230V)

Chassis			UX3'	UX2'+UX3'	UX2'+UX3'
HP			14	18	20
Ton			12	14	16
Model Name		Combination Unit	ARUB144BT3	ARUB168BT3	ARUB192BT3
		Independent Unit		ARUB072BT3 ARUB096BT3	ARUB072BT3 ARUB121BT3
Capacity	Cooling Nominal	Btu/h	144,000	168,000	192,000
	Cooling Rated		138,000	160,000	184,000
	Heating Nominal	Btu/h	162,000	189,000	216,000
	Heating Rated		154,000	180,000	206,000
Casing Color			Warm Gray Morning Gray	Warm Gray Morning Gray	Warm Gray Morning Gray
Heat Exchanger			Gold fin	Gold fin	Gold fin
Compressor	Type		HSS DC Scroll	HSS DC Scroll	HSS DC Scroll
	Piston Displacement	cm^2/rev	50.2+66.49	50.2 + (50.2+66.49)	50.2 + (50.2+66.49)
	Number of Revolution(@60Hz)	R.P.M	3,600+3,488	3,600 + (3,600+3,488)	3,600 + (3,600+3,488)
	Motor Output x Number	W	(5,143+4,950) x 1	5,143 + (5,143+4,950)x1	5,143 + (5,143+4,950)x1
	Starting Method		Inverter,Direct On Line	Inverter,Direct On Line	Inverter,Direct On Line
	Inverter operation range	Hz	20~120	20~120	20~120
	Oil Type		FVC68D(PVE)	FVC68D(PVE)	FVC68D(PVE)
	Oil Charge	L	5,500	9,000	9,000
Fan	Type		Propeller fan	Propeller fan	Propeller fan
	Motor Output x Number	W	600 x 2	750 + (600 x 2)	750 + (600 x 2)
	Air Flow Rate(High)	CMM	250	390	420
		cfm	8,800	13,700	14,800
	Drive		DC INVERTER	DC INVERTER	DC INVERTER
	Discharge	Side / Top	TOP	TOP	TOP
Pipe Connctions	Liquid Pipes	mm(inch)	12.7(1/2)	15.88(5/8)	15.88(5/8)
	Low Pressure Gas Pipes	mm(inch)	28.58(1 1/8)	28.58(1 1/8)	28.58(1 1/8)
	High Pressure Gas Pipes	mm(inch)	22.2(7/8)	22.2(7/8)	22.2(7/8)
Dimensions(WxHxD)		mm	(1,240×1,680×760)×1	(920×1,680×760)×1 (1,240×1,680×760)×1	(920×1,680×760)×1 (1,240×1,680×760)×1
		inch	(48.8×66.1×29.9)×1	(36.2×66.1×29.9)×1 (48.8×66.1×29.9)×1	(36.2×66.1×29.9)×1 (48.8×66.1×29.9)×1
Net Weight		kg	(280 x 1)	(190 x 1) + (280 x 1)	(190 x 1) + (280 x 1)
		lbs	(617 x 1)	(418 x 1) + (617 x 1)	(418 x 1) + (617 x 1)
Gross Weight		kg	(295 x 1)	(200 x 1) + (295 x 1)	(200 x 1) + (295 x 1)
		lbs	(650 x 1)	(441 x 1) + (650 x 1)	(441 x 1) + (650 x 1)
Transmission Cable		mm^2(VCTF-SB)	1.0 ~ 1.5 x 2C	1.0 ~ 1.5 x 2C	1.0 ~ 1.5 x 2C
Refigerant	Refigerant name		R410A	R410A	R410A
	Control		EEV	EEV	EEV
Power Supply		Ø , V, Hz	3, 208/230, 60	3, 208/230, 60	3, 208/230, 60

Notes:

1. Capacities are based on the following conditions:
   - Cooling: - Indoor Temperature 27°C(80.6°F) DB/19°C(66.2°F) WB
     - Outdoor Temperature 35°C(95°F) DB/24°C(75.2°F) WB
   - Heating: - Indoor Temperature 20°C(68°F) DB/15°C(59°F) WB
     - Outdoor Temperature 7°C(44.6°F) DB/6°C(42.8°F) WB
   - Piping Length - Interconnecting Piping Length 7.5m
     - Level Difference of Zero
2. Capacities are net capacities
3. EEV : Electronic Expansion Valve
4. Wiring cable size must comply with the applicable local and national code.
5. Due to our policy of innovation some specifications may be changed without prior notification

Conversion Formula
RT = kW x 0.284
kcal/h = kW x 860
Btu/h = kW x 3412
CFM = m^3/min x 35.3

Copyright ©2011 LG Electronics. Inc. All right reserved.
Only for training and service purposes

LGE Internal Use Only

Heat Recovery(208/230V)

Chassis			UX2'+UX3'	UX3'+UX3'	UX3'+UX3'
HP			22	24	26
Ton			18	20	22
Model Name		Combination Unit	ARUB216BT3	ARUB240BT3	ARUB264BT3
		Independent Unit	ARUB072BT3 ARUB144BT3	ARUB096BT3 ARUB144BT3	ARUB121BT3 ARUB144BT3
Capacity	Cooling Nominal	Btu/h	216,000	240,000	264,000
	Cooling Rated		206,000	228,000	250,000
	Heating Nominal	Btu/h	243,000	270,000	297,000
	Heating Rated		230,000	256,000	282,000
Casing Color			Warm Gray Morning Gray	Warm Gray Morning Gray	Warm Gray Morning Gray
Heat Exchanger			Gold fin	Gold fin	Gold fin
Compressor	Type		HSS DC Scroll	HSS DC Scroll	HSS DC Scroll
	Piston Displacement	cm^2/rev	50.2 + (50.2+66.49)	(50.2+66.49) x 2	(50.2+66.49) x 2
	Number of Revolution(@60Hz)	R.P.M	3,600 + (3,600+3,488)	(3,600+3,488) x 2	(3,600+3,488) x 2
	Motor Output x Number	W	5,143 + (5,143+4,950)x2	(5,143+4,950)x2	(5,143+4,950)x2
	Starting Method		Inverter,Direct On Line	Inverter,Direct On Line	Inverter,Direct On Line
	Inverter operation range	Hz	20~120	20~120	20~120
	Oil Type		FVC68D(PVE)	FVC68D(PVE)	FVC68D(PVE)
	Oil Charge	L	9,000	11,000	11,000
Fan	Type		Propeller fan	Propeller fan	Propeller fan
	Motor Output x Number	W	750 + (600 x 2)	(600 x 2) x 2	(600 x 2) x 2
	Air Flow Rate(High)	CMM	430	460	490
		cfm	15,100	16,200	17,300
	Drive		DC INVERTER	DC INVERTER	DC INVERTER
	Discharge	Side / Top	TOP	TOP	TOP
Pipe Connctions	Liquid Pipes	mm(inch)	15.88(5/8)	15.88(5/8)	19.05(3/4)
	Low Pressure Gas Pipes	mm(inch)	28.58(1 1/8)	34.9(1 3/8)	34.9(1 3/8)
	High Pressure Gas Pipes	mm(inch)	28.58(1 1/8)	28.58(1 1/8)	28.58(1 1/8)
Dimensions(WxHxD)		mm	(920×1,680×760)×1 (1,240×1,680×760)×1	(1,240×1,680×760)×2	(1,240×1,680×760)×2
		inch	(36.2×66.1×29.9)×1 (48.8×66.1×29.9)×1	(48.8×66.1×29.9)×2	(48.8×66.1×29.9)×2
Net Weight		kg	(190 x 1) + (280 x 1)	(280 x 2)	(280 x 2)
		lbs	(418 x 1) + (617 x 1)	(617 x 2)	(617 x 2)
Gross Weight		kg	(200 x 1) + (295 x 1)	(295 x 2)	(295 x 2)
		lbs	(441 x 1) + (650 x 1)	(650 x 2)	(650 x 2)
Transmission Cable		mm^2(VCTF-SB)	1.0 ~ 1.5 x 2C	1.0 ~ 1.5 x 2C	1.0 ~ 1.5 x 2C
Refigerant	Refigerant name		R410A	R410A	R410A
	Control		EEV	EEV	EEV
Power Supply		Ø , V, Hz	3, 208/230, 60	3, 208/230, 60	3, 208/230, 60

Notes:

1. Capacities are based on the following conditions:
   - Cooling: - Indoor Temperature 27°C(80.6°F) DB/19°C(66.2°F) WB
     - Outdoor Temperature 35°C(95°F) DB/24°C(75.2°F) WB
   - Heating: - Indoor Temperature 20°C(68°F) DB/15°C(59°F) WB
     - Outdoor Temperature 7°C(44.6°F) DB/6°C(42.8°F) WB
   - Piping Length - Interconnecting Piping Length 7.5m
     - Level Difference of Zero
2. Capacities are net capacities
3. EEV : Electronic Expansion Valve
4. Wiring cable size must comply with the applicable local and national code.
5. Due to our policy of innovation some specifications may be changed without prior notification

Conversion Formula
RT = kW x 0.284
kcal/h = kW x 860
Btu/h = kW x 3412
CFM = m^3/min x 35.3

Copyright ©2011 LG Electronics. Inc. All right reserved.
Only for training and service purposes

LGE Internal Use Only

Heat Recovery(208/230V)

Chassis			UX3'+UX3'	UX2'+UX3'+UX3'	UX2'+UX3'+UX3'
HP			28	32	34
Ton			24	26	28
Model Name		Combination Unit	ARUB288BT3	ARUB312BT3	ARUB336BT3
		Independent Unit	ARUB144BT3 ARUB144BT3	ARUB072BT3 ARUB096BT3 ARUB144BT3	ARUB072BT3 ARUB121BT3 ARUB144BT3
Capacity	Cooling Nominal	Btu/h	288,000	312,000	336,000
	Cooling Rated		274,000	296,000	320,000
	Heating Nominal	Btu/h	324,000	351,000	378,000
	Heating Rated		308,000	334,000	361,000
Casing Color			Warm Gray Morning Gray	Warm Gray Morning Gray	Warm Gray Morning Gray
Heat Exchanger			Gold fin	Gold fin	Gold fin
Compressor	Type		HSS DC Scroll	HSS DC Scroll	HSS DC Scroll
	Piston Displacement	cm^2/rev	(50.2+66.49) x 2	50.2 + (50.2+66.49) x 2	50.2 + (50.2+66.49) x 2
	Number of Revolution(@60Hz)	R.P.M	(3,600+3,488) x 2	3,600 + (3,600+3,488) x 2	3,600 + (3,600+3,488) x 2
	Motor Output x Number	W	(5,143+4,950) x 2	5,143 + (5,143+4,950) x 2	5,143 + (5,143+4,950) x 2
	Starting Method		Inverter,Direct On Line	Inverter,Direct On Line	Inverter,Direct On Line
	Inverter operation range	Hz	20~120	20~120	20~120
	Oil Type		FVC68D(PVE)	FVC68D(PVE)	FVC68D(PVE)
	Oil Charge	L	11,000	14,500	14,500
Fan	Type		Propeller fan	Propeller fan	Propeller fan
	Motor Output x Number	W	(600 x 2) x 2	750 + (600 x 2) x 2	750 + (600 x 2) x 2
	Air Flow Rate(High)	CMM	500	640	670
		cfm	17,600	22,500	23,600
	Drive		DC INVERTER	DC INVERTER	DC INVERTER
	Discharge	Side / Top	TOP	TOP	TOP
Pipe Connctions	Liquid Pipes	mm(inch)	19.05(3/4)	19.05(3/4)	19.05(3/4)
	Low Pressure Gas Pipes	mm(inch)	34.9(1 3/8)	34.9(1 3/8)	34.9(1 3/8)
	High Pressure Gas Pipes	mm(inch)	28.58(1 1/8)	28.58(1 1/8)	28.58(1 1/8)
Dimensions(WxHxD)		mm	(1,240×1,680×760)×2	(920×1,680×760)×1 (1,240×1,680×760)×2	(920×1,680×760)×1 (1,240×1,680×760)×2
		inch	(48.8×66.1×29.9)×2	(36.2×66.1×29.9)×1 (48.8×66.1×29.9)×2	(36.2×66.1×29.9)×1 (48.8×66.1×29.9)×2
Net Weight		kg	(280 x 2)	(190 x 1) + (280 x 2)	(190 x 1) + (280 x 2)
		lbs	(617 x 2)	(418 x 1) + (617 x 2)	(418 x 1) + (617 x 2)
Gross Weight		kg	(295 x 2)	(200 x 1) + (295 x 2)	(200 x 1) + (295 x 2)
		lbs	(650 x 2)	(441 x 1) + (650 x 2)	(441 x 1) + (650 x 2)
Transmission Cable		mm^2(VCTF-SB)	1.0 ~ 1.5 x 2C	1.0 ~ 1.5 x 2C	1.0 ~ 1.5 x 2C
Refigerant	Refigerant name		R410A	R410A	R410A
	Control		EEV	EEV	EEV
Power Supply		Ø , V, Hz	3, 208/230, 60	3, 208/230, 60	3, 208/230, 60

Notes:

1. Capacities are based on the following conditions:
   - Cooling: - Indoor Temperature 27°C(80.6°F) DB/19°C(66.2°F) WB
     - Outdoor Temperature 35°C(95°F) DB/24°C(75.2°F) WB
   - Heating: - Indoor Temperature 20°C(68°F) DB/15°C(59°F) WB
     - Outdoor Temperature 7°C(44.6°F) DB/6°C(42.8°F) WB
   - Piping Length - Interconnecting Piping Length 7.5m
     - Level Difference of Zero
2. Capacities are net capacities
3. EEV : Electronic Expansion Valve
4. Wiring cable size must comply with the applicable local and national code.
5. Due to our policy of innovation some specifications may be changed without prior notification

Conversion Formula
RT = kW x 0.284
kcal/h = kW x 860
Btu/h = kW x 3412
CFM = m^3/min x 35.3

Copyright ©2011 LG Electronics. Inc. All right reserved.
Only for training and service purposes

LGE Internal Use Only

Heat Recovery(208/230V)

Chassis			UX2'+UX3'+UX3'	UX3'+UX3'+UX3'	UX3'+UX3'+UX3'
HP			36	38	40
Ton			30	32	34
Model Name		Combination Unit	ARUB360BT3	ARUB384BT3	ARUB408BT3
		Independent Unit	ARUB072BT3 ARUB144BT3 ARUB144BT3	ARUB096BT3 ARUB144BT3 ARUB144BT3	ARUB121BT3 ARUB144BT3 ARUB144BT3
Capacity	Cooling Nominal	Btu/h	360,000	384,000	408,000
	Cooling Rated		342,000	366,000	390,000
	Heating Nominal	Btu/h	405,000	432,000	459,000
	Heating Rated		387,000	412,000	437,000
Casing Color			Warm Gray Morning Gray	Warm Gray Morning Gray	Warm Gray Morning Gray
Heat Exchanger			Gold fin	Gold fin	Gold fin
Compressor	Type		HSS DC Scroll	HSS DC Scroll	HSS DC Scroll
	Piston Displacement	cm^2/rev	50.2 + (50.2+66.49) x 2	(50.2+66.49) x 3	(50.2+66.49) x 3
	Number of Revolution(@60Hz)	R.P.M	3,600 + (3,600+3,488) x 2	(3,600+3,488) x 3	(3,600+3,488) x 3
	Motor Output x Number	W	5,143 + (5,143+4,950) x 2	(5,143+4,950) x 3	(5,143+4,950) x 3
	Starting Method		Inverter,Direct On Line	Inverter,Direct On Line	Inverter,Direct On Line
	Inverter operation range	Hz	20~120	20~120	20~120
	Oil Type		FVC68D(PVE)	FVC68D(PVE)	FVC68D(PVE)
	Oil Charge	L	14,500	16,500	16,500
Fan	Type		Propeller fan	Propeller fan	Propeller fan
	Motor Output x Number	W	750 + (600 x 2) x 2	(600 x 2) x 3	(600 x 2) x 3
	Air Flow Rate(High)	CMM	680	710	740
		cfm	23,900	25,000	26,100
	Drive		DC INVERTER	DC INVERTER	DC INVERTER
	Discharge	Side / Top	TOP	TOP	TOP
Pipe Connctions	Liquid Pipes	mm(inch)	19.05(3/4)	19.05(3/4)	19.05(3/4)
	Low Pressure Gas Pipes	mm(inch)	41.3(1 5/8)	41.3(1 5/8)	41.3(1 5/8)
	High Pressure Gas Pipes	mm(inch)	28.58(1 1/8)	34.9(1 3/8)	34.9(1 3/8)
Dimensions(WxHxD)		mm	(920×1,680×760)×1 (1,240×1,680×760)×2	(1,240×1,680×760)×3	(1,240×1,680×760)×3
		inch	(36.2×66.1×29.9)×1 (48.8×66.1×29.9)×2	(48.8×66.1×29.9)×3	(48.8×66.1×29.9)×3
Net Weight		kg	(190 x 1) + (280 x 2)	(280 x 3)	(280 x 3)
		lbs	(418 x 1) + (617 x 2)	(617 x 3)	(617 x 3)
Gross Weight		kg	(200 x 1) + (295 x 2)	(295 x 3)	(295 x 3)
		lbs	(441 x 1) + (650 x 2)	(650 x 3)	(650 x 3)
Transmission Cable		mm^2(VCTF-SB)	1.0 ~ 1.5 x 2C	1.0 ~ 1.5 x 2C	1.0 ~ 1.5 x 2C
Refigerant	Refigerant name		R410A	R410A	R410A
	Control		EEV	EEV	EEV
Power Supply		Ø , V, Hz	3, 208/230, 60	3, 208/230, 60	3, 208/230, 60

Notes:

1. Capacities are based on the following conditions:
   - Cooling: - Indoor Temperature 27°C(80.6°F) DB/19°C(66.2°F) WB
     - Outdoor Temperature 35°C(95°F) DB/24°C(75.2°F) WB
   - Heating: - Indoor Temperature 20°C(68°F) DB/15°C(59°F) WB
     - Outdoor Temperature 7°C(44.6°F) DB/6°C(42.8°F) WB
   - Piping Length - Interconnecting Piping Length 7.5m
     - Level Difference of Zero
2. Capacities are net capacities
3. EEV : Electronic Expansion Valve
4. Wiring cable size must comply with the applicable local and national code.
5. Due to our policy of innovation some specifications may be changed without prior notification

Conversion Formula
RT = kW x 0.284
kcal/h = kW x 860
Btu/h = kW x 3412
CFM = m^3/min x 35.3

Copyright ©2011 LG Electronics. Inc. All right reserved.
Only for training and service purposes

LGE Internal Use Only

Heat Recovery(208/230V)

Chassis			UX3'+UX3'+UX3'
HP			42
Ton			36
Model Name		Combination Unit	ARUB432BT3
		Independent Unit	ARUB144BT3 ARUB144BT3 ARUB144BT3
Capacity	Cooling Nominal	Btu/h	432,000
	Cooling Rated		414,000
	Heating Nominal	Btu/h	486,000
	Heating Rated		462,000
Casing Color			Warm Gray Morning Gray
Heat Exchanger			Gold fin
Compressor	Type		HSS DC Scroll
	Piston Displacement	cm^2/rev	(50.2+66.49) x 3
	Number of Revolution(@60Hz)	R.P.M	(3,600+3,488) x 3
	Motor Output x Number	W	(5,143+4,950) x 3
	Starting Method		Inverter,Direct On Line
	Inverter operation range	Hz	20~120
	Oil Type		FVC68D(PVE)
	Oil Charge	L	16,500
Fan	Type		Propeller fan
	Motor Output x Number	W	(600 x 2) x 3
	Air Flow Rate(High)	CMM	750
		cfm	26,400
	Drive		DC INVERTER
	Discharge	Side / Top	TOP
Pipe Connctions	Liquid Pipes	mm(inch)	19.05(3/4)
	Low Pressure Gas Pipes	mm(inch)	41.3(1 5/8)
	High Pressure Gas Pipes	mm(inch)	34.9(1 3/8)
Dimensions(WxHxD)		mm	(1,240×1,680×760)×3
		inch	(48.8×66.1×29.9)×3
Net Weight		kg	(280 x 3)
		lbs	(617 x 3)
Gross Weight		kg	(295 x 3)
		lbs	(650 x 3)
Transmission Cable		mm^2(VCTF-SB)	1.0 ~ 1.5 x 2C
Refigerant	Refigerant name		R410A
	Control		EEV
Power Supply		Ø , V, Hz	3, 208/230, 60

Notes:

1. Capacities are based on the following conditions:
   - Cooling: - Indoor Temperature 27°C(80.6°F) DB/19°C(66.2°F) WB
     - Outdoor Temperature 35°C(95°F) DB/24°C(75.2°F) WB
   - Heating: - Indoor Temperature 20°C(68°F) DB/15°C(59°F) WB
     - Outdoor Temperature 7°C(44.6°F) DB/6°C(42.8°F) WB
   - Piping Length - Interconnecting Piping Length 7.5m
     - Level Difference of Zero
2. Capacities are net capacities
3. EEV : Electronic Expansion Valve
4. Wiring cable size must comply with the applicable local and national code.
5. Due to our policy of innovation some specifications may be changed without prior notification

Conversion Formula
RT = kW x 0.284
kcal/h = kW x 860
Btu/h = kW x 3412
CFM = m^3/min x 35.3

Copyright ©2011 LG Electronics. Inc. All right reserved.
Only for training and service purposes

LGE Internal Use Only

2. Functions

Category	Function	Single Unit	Series Unit
Reliability	Defrost/ Deicing	O	O
	High pressure switch	O	O
	Phase protection	O	O
	Restart delay(3-minutes)	O	O
	Self diagnosis	O	O
	Soft start	O	O
	Trial operation	O	O
Convenience	Auto operation(Artificial intelligence)	O	O
	Auto restart operation	O	O
CAC network Function	Network Solution(LGAP)	O	O

O : Applied X : Not applied - : No reation
Option : Model name & price are different according to options, and assembled in factory with main unit
Accessory : Installed at field, ordered and purchased separately by the corresponding model name, supplied with separated package.

Category	Device		MULTI V III Heat Recovery
CAC Network	Remote Controller	Wired Remote Controller (Standard type)	PQRCVSL0(Black)
			PQRCVSL0QW(White)
		Wireless Remote Controller (Standard type)	PQWRH(C)DF0
	Central Controller	Simple Controller	PQCSB101S0
		AC Smart II	PQCSW320A1E
		ACP	PQCPA11A0E(Without IO)
			PQCPB11A0E(With IO)
		AC Manager	PQCSS520A0E
	BNU	LONWORKS Gateway	PQNFB16A1
		BACnet Gateway	PQNFB17B0
	Dry Contact(Indoor Unit)		PQDSB
	ODU Dry Contact		PQDSBCDVM0
Program	LG MV		Option
Other	Y branch		Accessory
	Header branch		Accessory
	Heat Recovery Unit	PRHR021A	Accessory
		PRHR031A	Accessory
		PRHR041A	Accessory
	Air Guide		Accessory
	Refrigerant Charging Kit		PRAC1

O : Applied X : Not applied - : No reation
Option : Model name & price are different according to options, and assembled in factory with main unit
Accessory : Installed at field, ordered and purchased separately by the corresponding model name, supplied with separated package.

Copyright ©2011 LG Electronics. Inc. All right reserved.
Only for training and service purposes

LGE Internal Use Only

3. Dimensions

Outdoor Unit

ARUB072BT3 ARUB072DT3

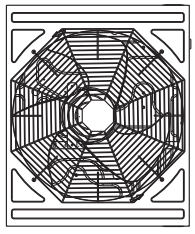

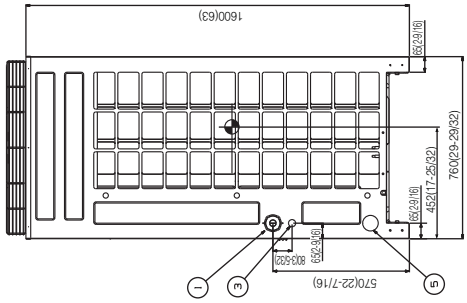

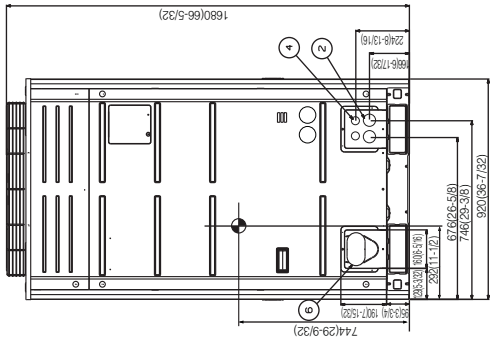

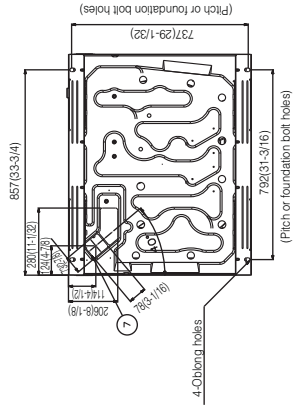

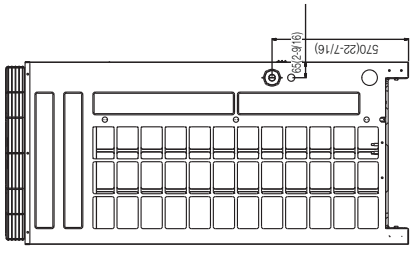

No.	Parts name	Remarks
1	Power cord routing hole(side)	Ø66(2-19/32)
2	Power cord routing hole(front)	Ø45(1-25/32)
3	Wire routing hole(side)	Ø30(1-3/16)
4	Wire routing hole(front)	Ø30(1-3/16)
5	Pipe routing hole(side)	Ø65(2-9/16)
6	Pipe routing hole(front)	
7	Pipe routing hole(front)	

CHASSIS CODE: UX2

Gravity point

[Unit : mm(Inch)]

LG Electronics

Copyright ©2011 LG Electronics. Inc. All right reserved.
Only for training and service purposes

LGE Internal Use Only

Outdoor Unit	
ARUB096BT3	ARUB096DT3
ARUB121BT3	ARUB121DT3
ARUB144BT3	ARUB144DT3

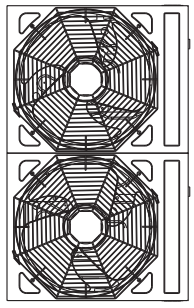

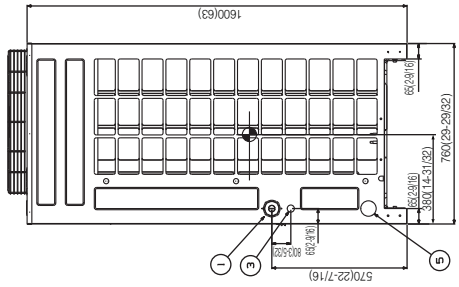

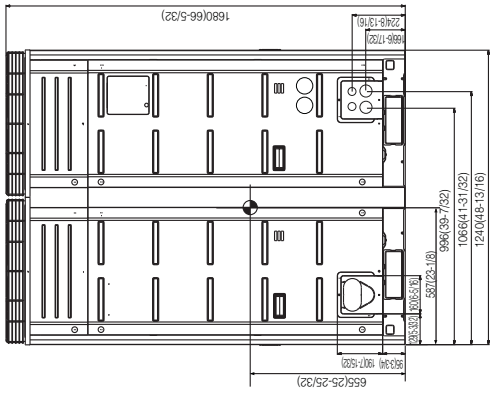

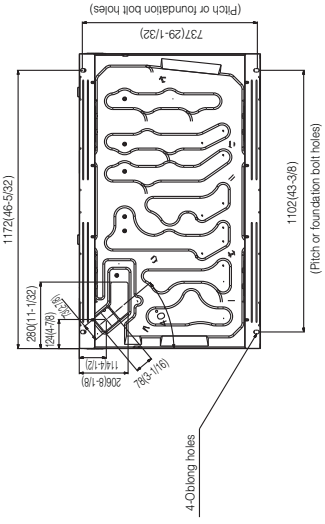

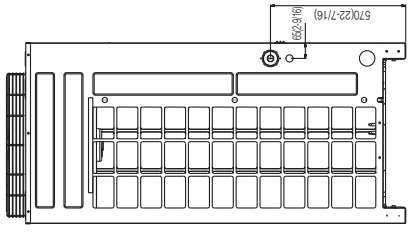

No.	Parts name	Remarks
1	Power cord routing hole(side)	Ø66(2-19/32)
2	Power cord routing hole(front)	Ø45(1-25/32)
3	Wire routing hole(side)	Ø30(1-3/16)
4	Wire routing hole(front)	Ø30(1-3/16)
5	Pipe routing hole(side)	Ø65(2-9/16)
6	Pipe routing hole(front)	
7	Pipe routing hole(front)	

CHASSIS CODE: UX3

Gravity point

[Unit : mm(Inch)]

LG Electronics

Copyright ©2011 LG Electronics. Inc. All right reserved.
Only for training and service purposes

LGE Internal Use Only

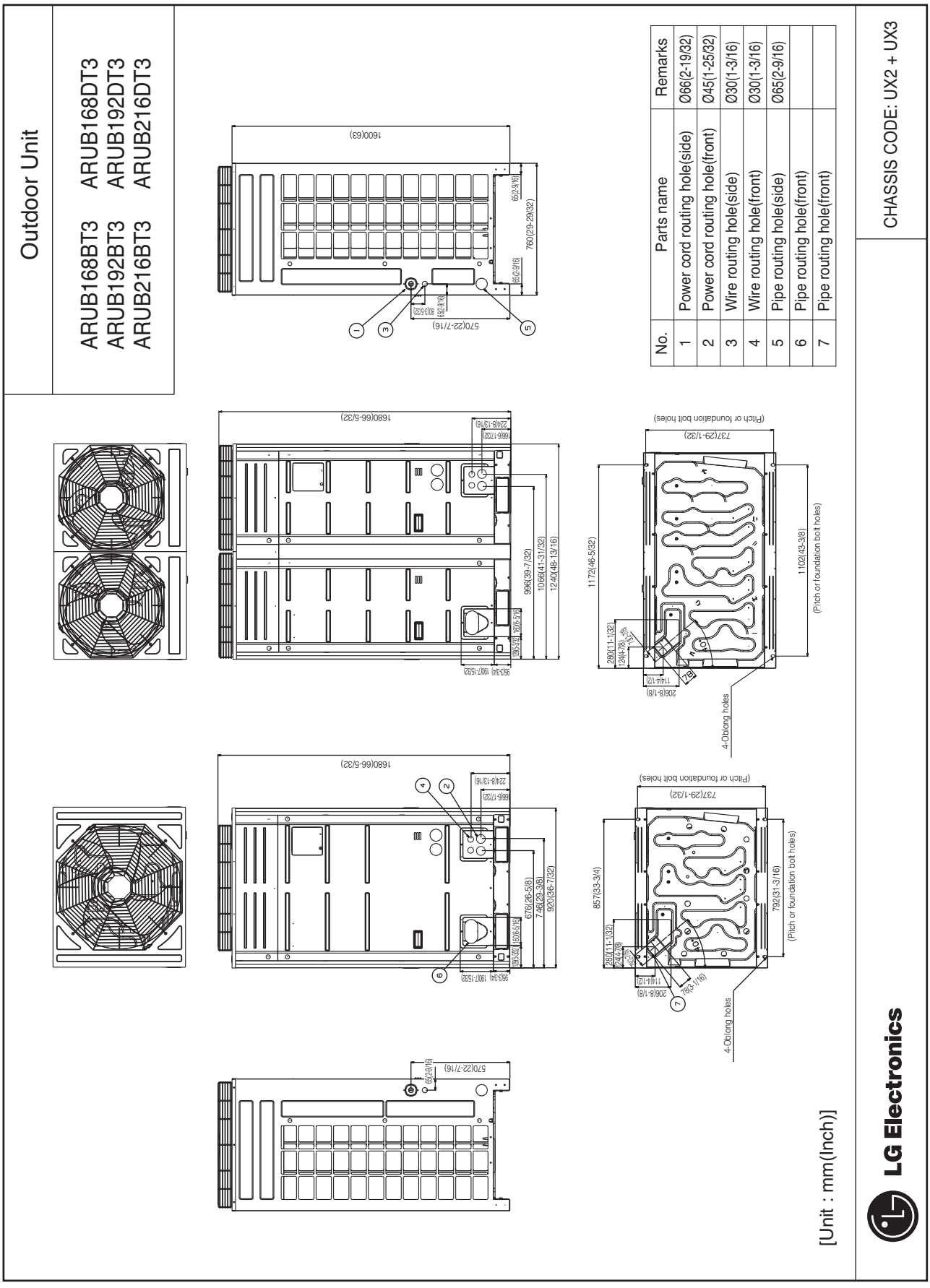

No.	Parts name	Remarks
1	Power cord routing hole(side)	Ø66(2-19/32)
2	Power cord routing hole(front)	Ø45(1-25/32)
3	Wire routing hole(side)	Ø30(1-3/16)
4	Wire routing hole(front)	Ø30(1-3/16)
5	Pipe routing hole(side)	Ø65(2-9/16)
6	Pipe routing hole(front)	
7	Pipe routing hole(front)	

Copyright ©2011 LG Electronics. Inc. All right reserved.
Only for training and service purposes

LGE Internal Use Only

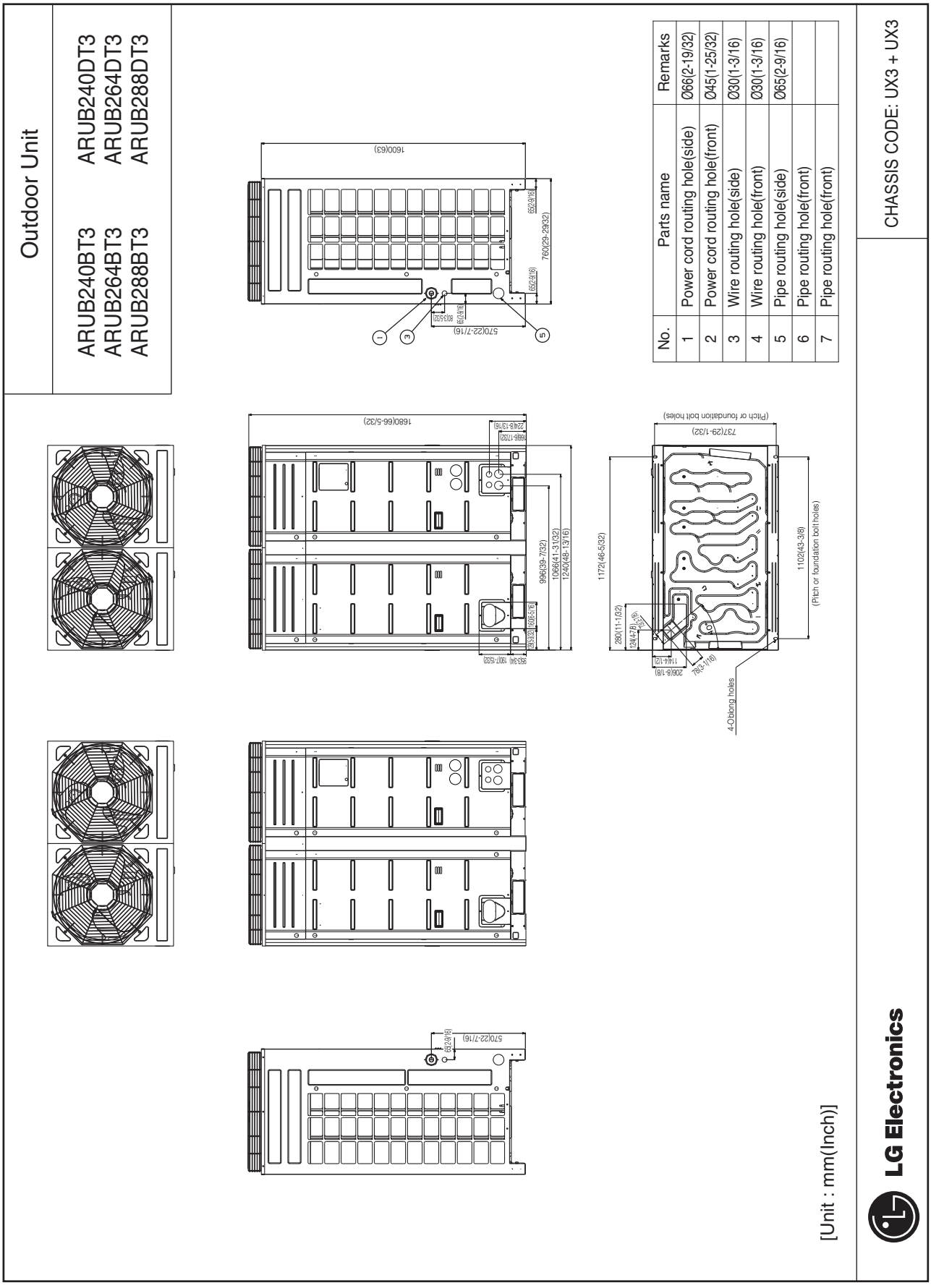

No.	Parts name	Remarks
1	Power cord routing hole(side)	Ø66(2-19/32)
2	Power cord routing hole(front)	Ø45(1-25/32)
3	Wire routing hole(side)	Ø30(1-3/16)
4	Wire routing hole(front)	Ø30(1-3/16)
5	Pipe routing hole(side)	Ø65(2-9/16)
6	Pipe routing hole(front)	
7	Pipe routing hole(front)	

Copyright ©2011 LG Electronics. Inc. All right reserved.
Only for training and service purposes

LGE Internal Use Only

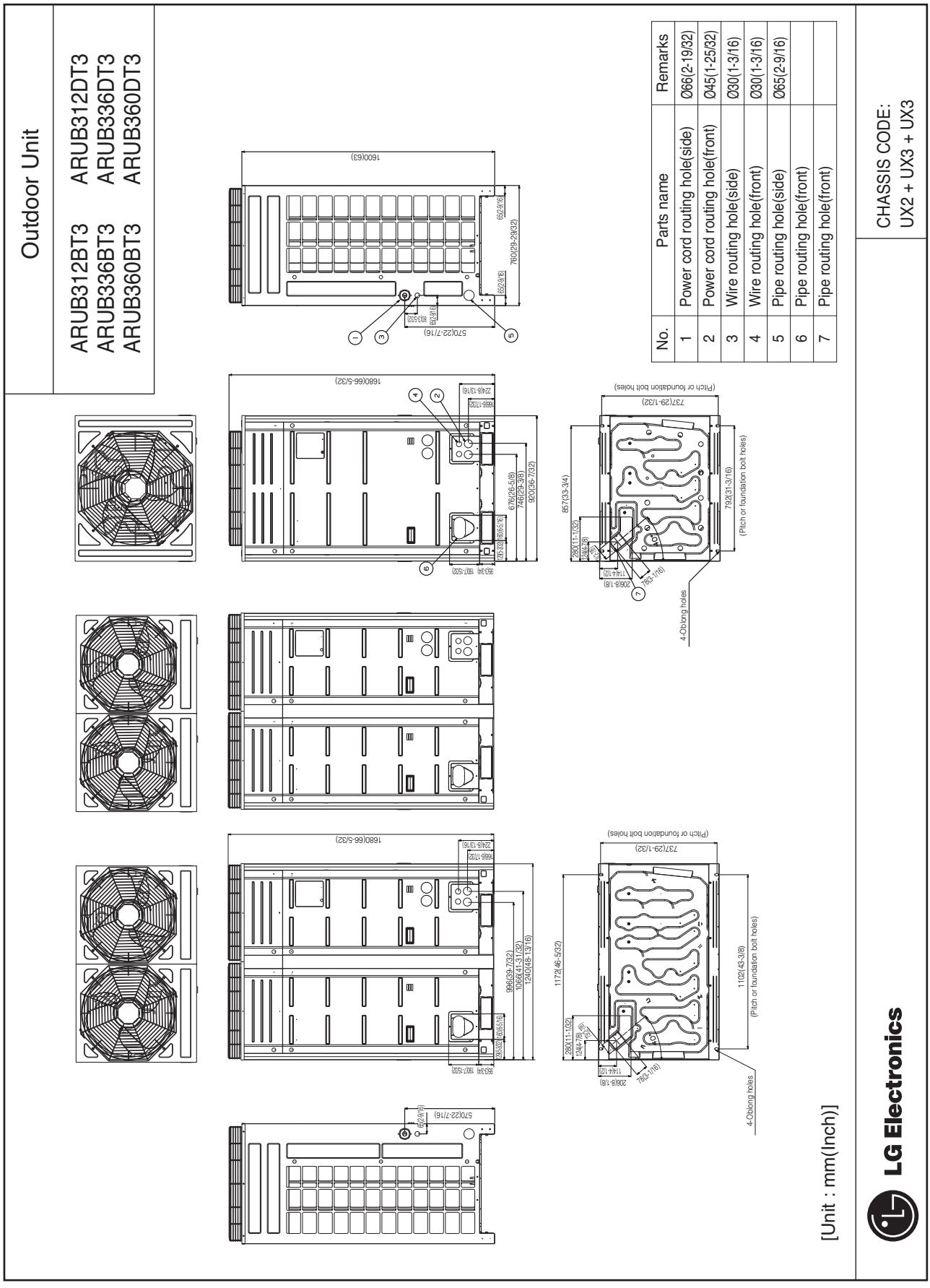

Copyright ©2011 LG Electronics. Inc. All right reserved.
Only for training and service purposes

LGE Internal Use Only

Outdoor Unit	
ARUB384BT3	ARUB384DT3
ARUB408BT3	ARUB408DT3
ARUB432BT3	ARUB432DT3

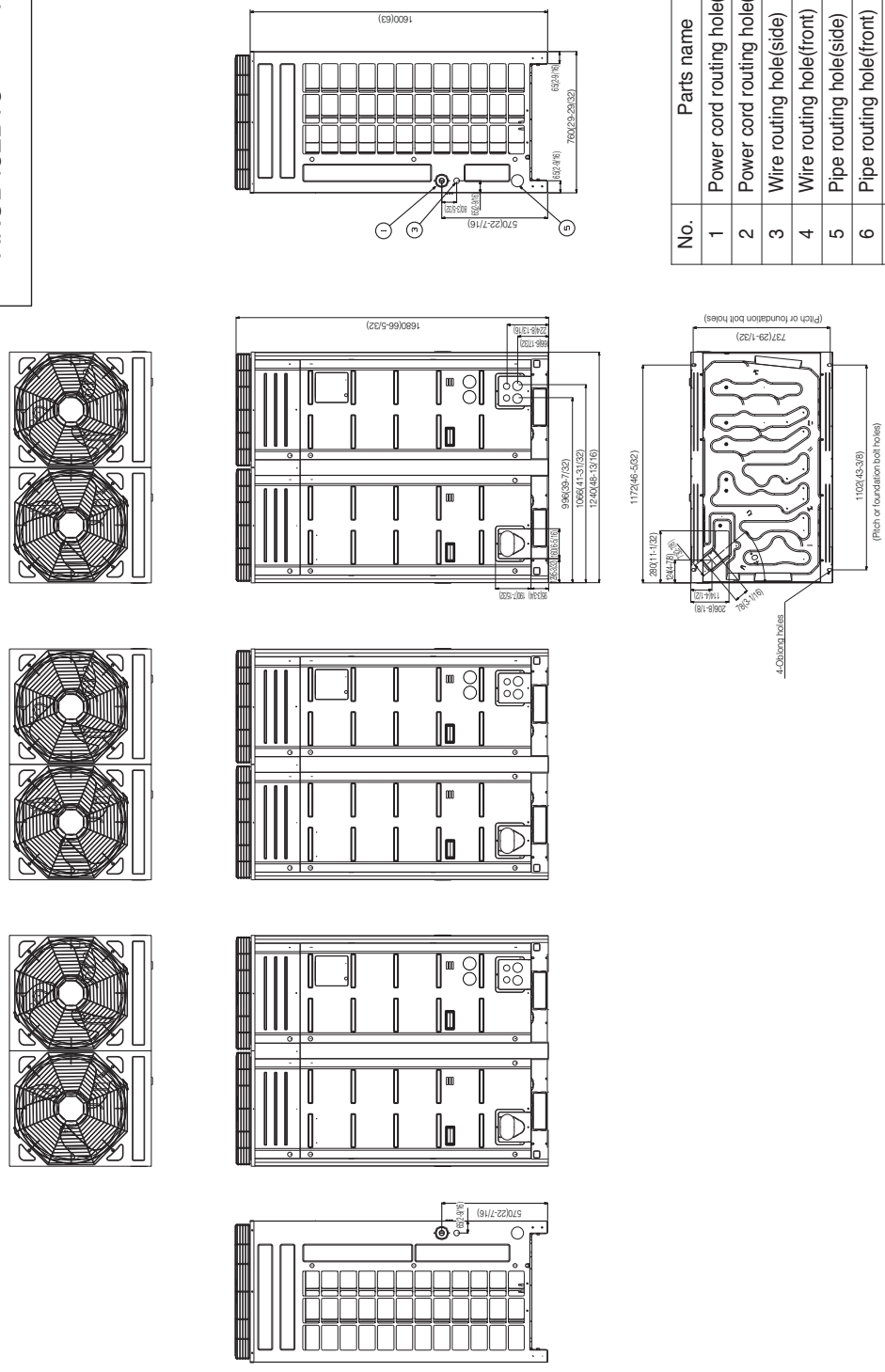

No.	Parts name	Remarks
1	Power cord routing hole(side)	Ø66(2-19/32)
2	Power cord routing hole(front)	Ø45(1-25/32)
3	Wire routing hole(side)	Ø30(1-3/16)
4	Wire routing hole(front)	Ø30(1-3/16)
5	Pipe routing hole(side)	Ø65(2-9/16)
6	Pipe routing hole(front)	
7	Pipe routing hole(front)	

[Unit : mm(Inch)]

CHASSIS CODE:
UX3 + UX3 + UX3

LG Electronics

Copyright ©2011 LG Electronics. Inc. All right reserved.
Only for training and service purposes

LGE Internal Use Only

4. Piping Diagrams

4.1 Heat Recovery Model

4.1.1 8HP(UX2 1Comp.)

Cooling Operation

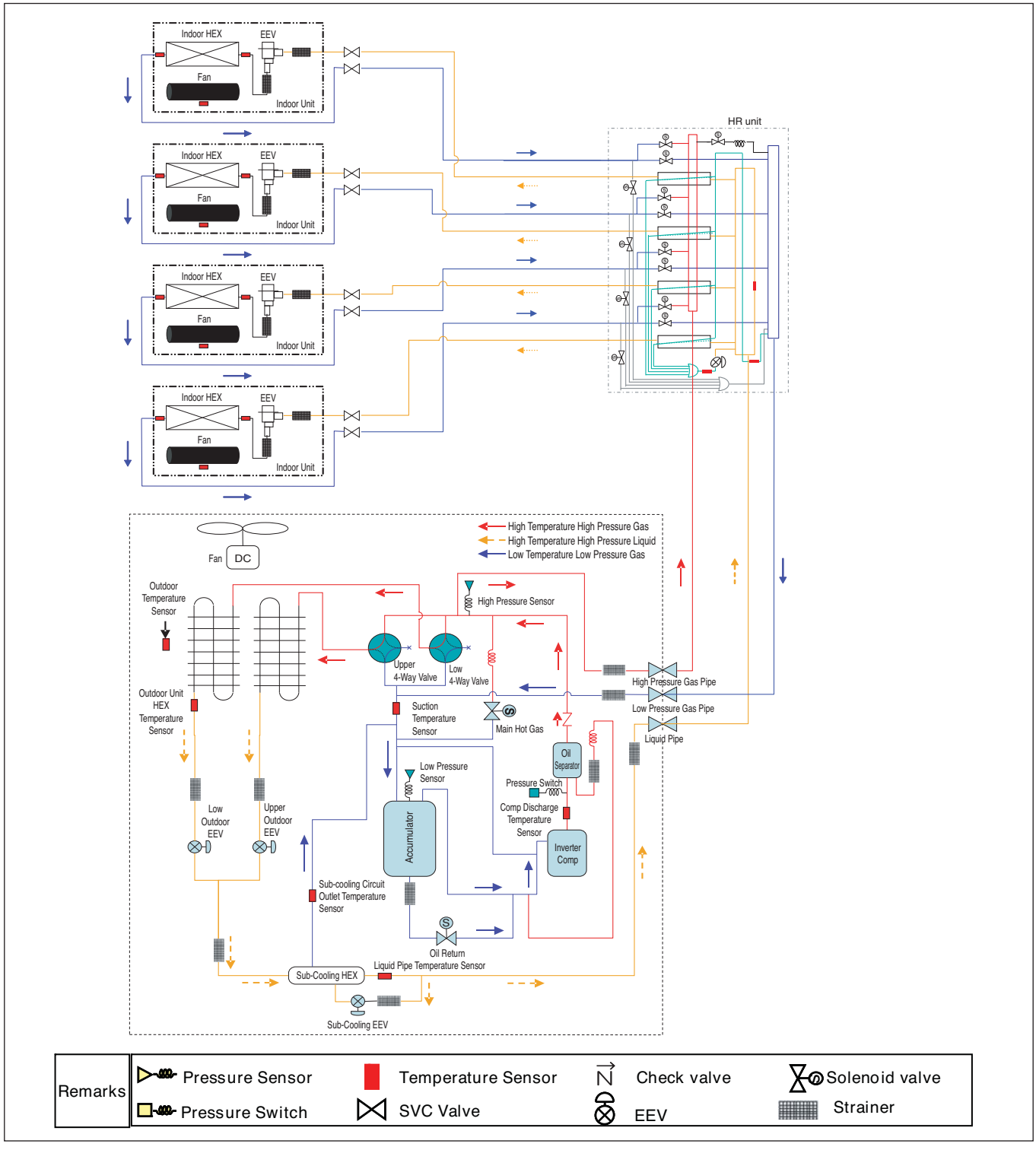

Copyright ©2011 LG Electronics. Inc. All right reserved.
Only for training and service purposes

LGE Internal Use Only

Cooling Operation at low ambient temperature

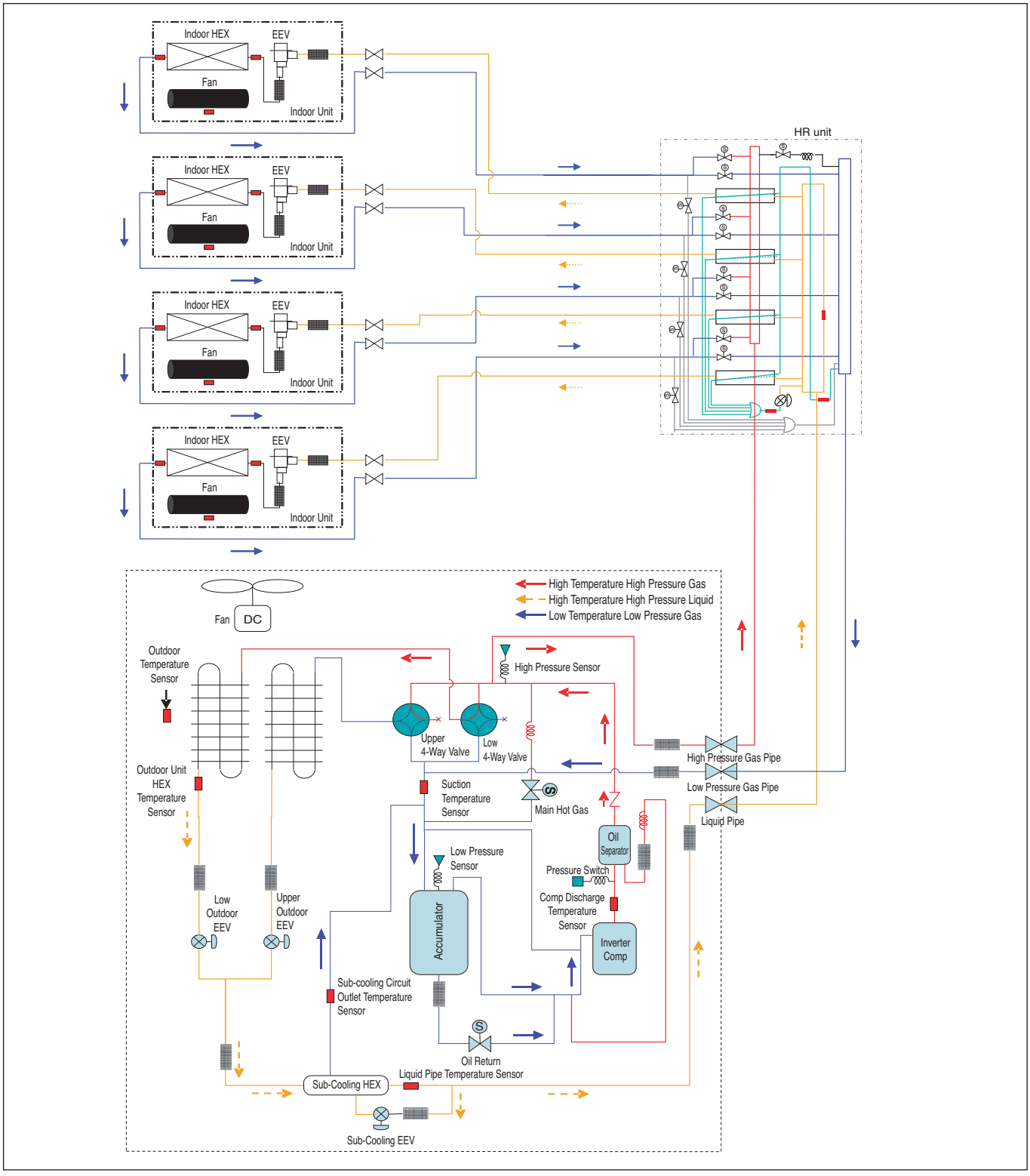

Remarks				
	Pressure Sensor	Temperature Sensor	Check valve	Solenoid valve
	Pressure Switch	SVC Valve	EEV	Strainer

Copyright ©2011 LG Electronics. Inc. All right reserved.
Only for training and service purposes

LGE Internal Use Only

Heating Operation

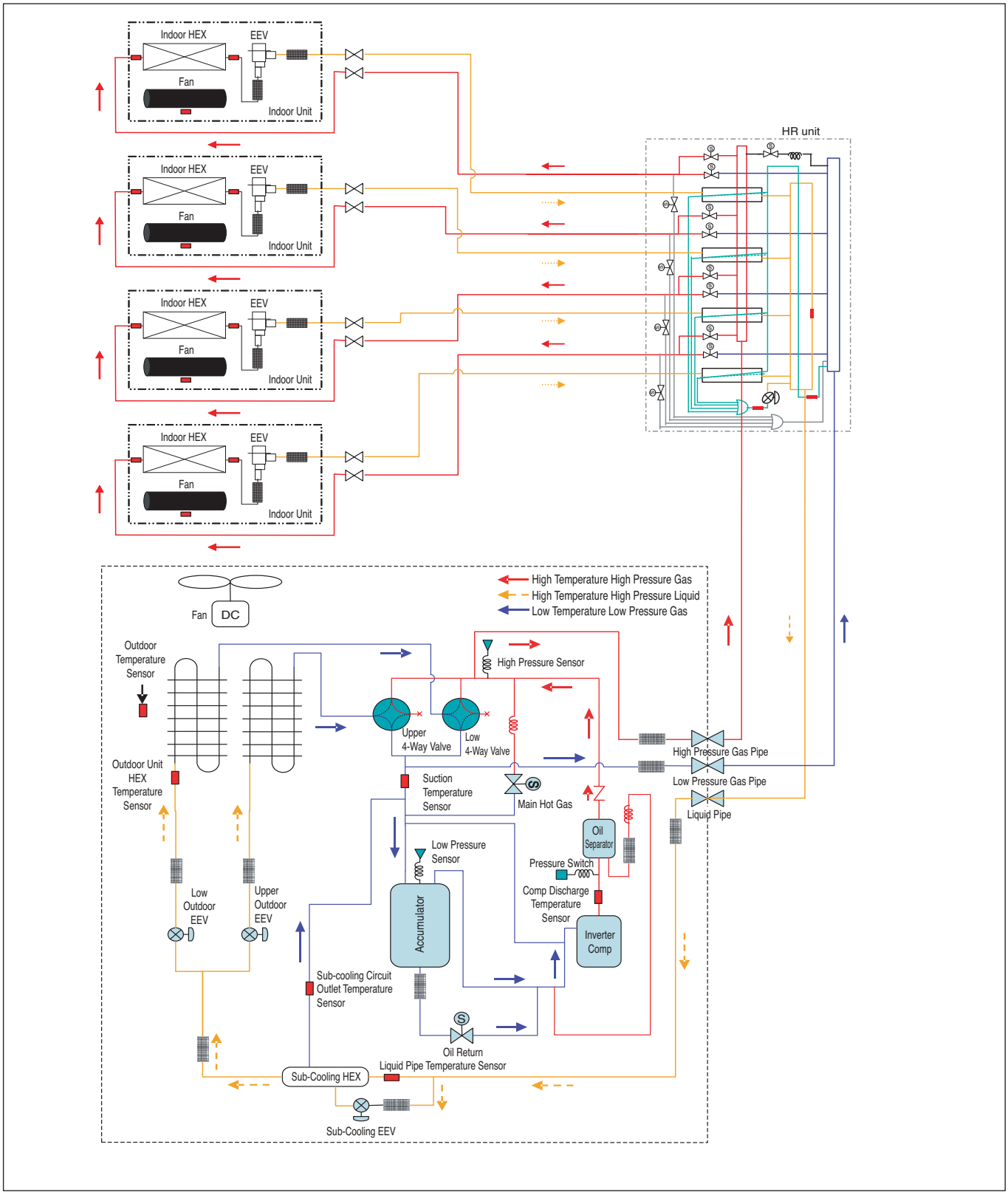

Remarks				
	Pressure Sensor	Temperature Sensor	Check valve	Solenoid valve
	Pressure Switch	SVC Valve	EEV	Strainer

Copyright ©2011 LG Electronics. Inc. All right reserved.
Only for training and service purposes

LGE Internal Use Only

Oil Return/ Defrost Operation

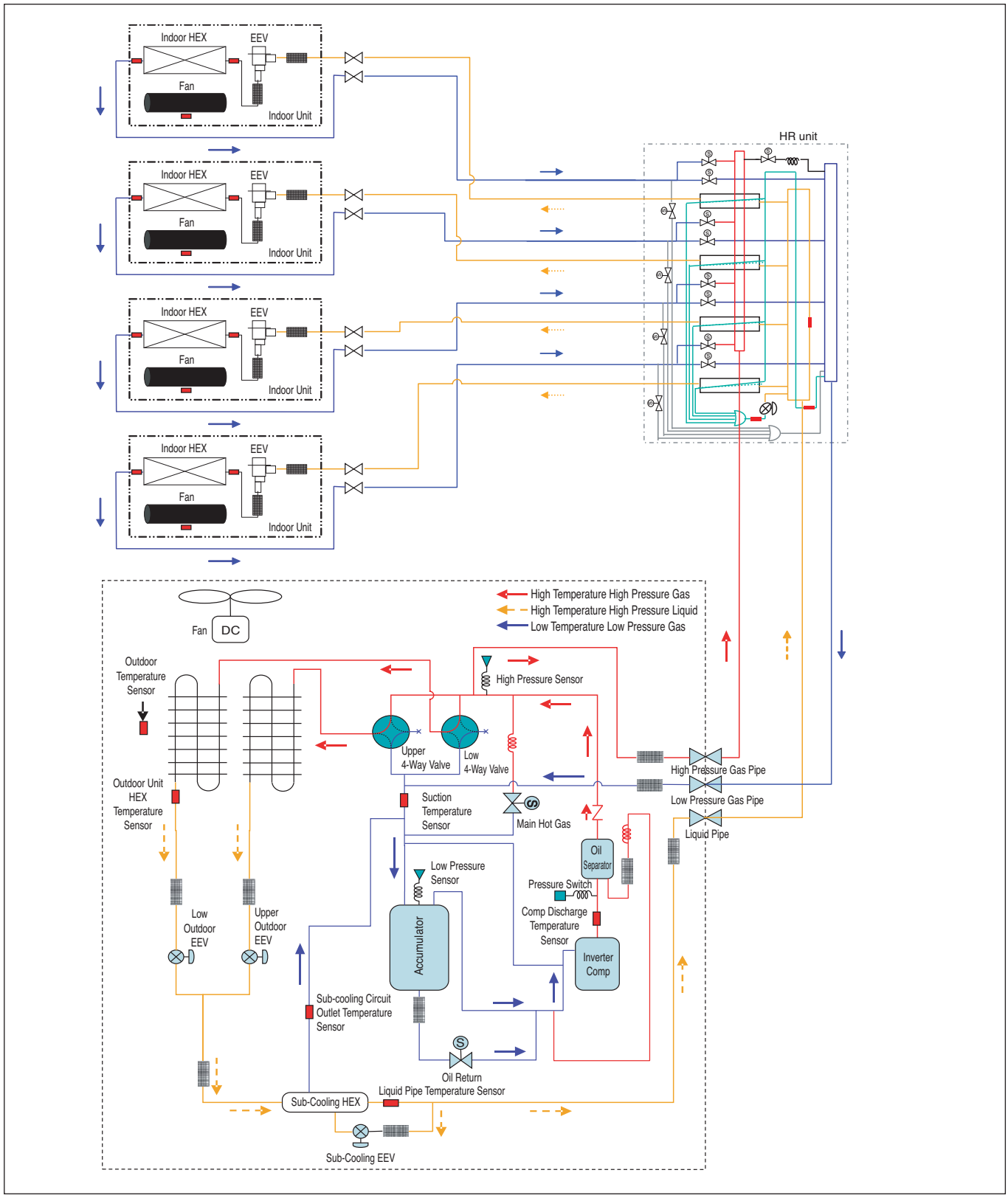

Remarks				
	Pressure Sensor	Temperature Sensor	Check valve	Solenoid valve
	Pressure Switch	SVC Valve	EEV	Strainer

Copyright ©2011 LG Electronics. Inc. All right reserved.
Only for training and service purposes

LGE Internal Use Only

Simultaneous Operation Mode 1(Cooling Based Operation)

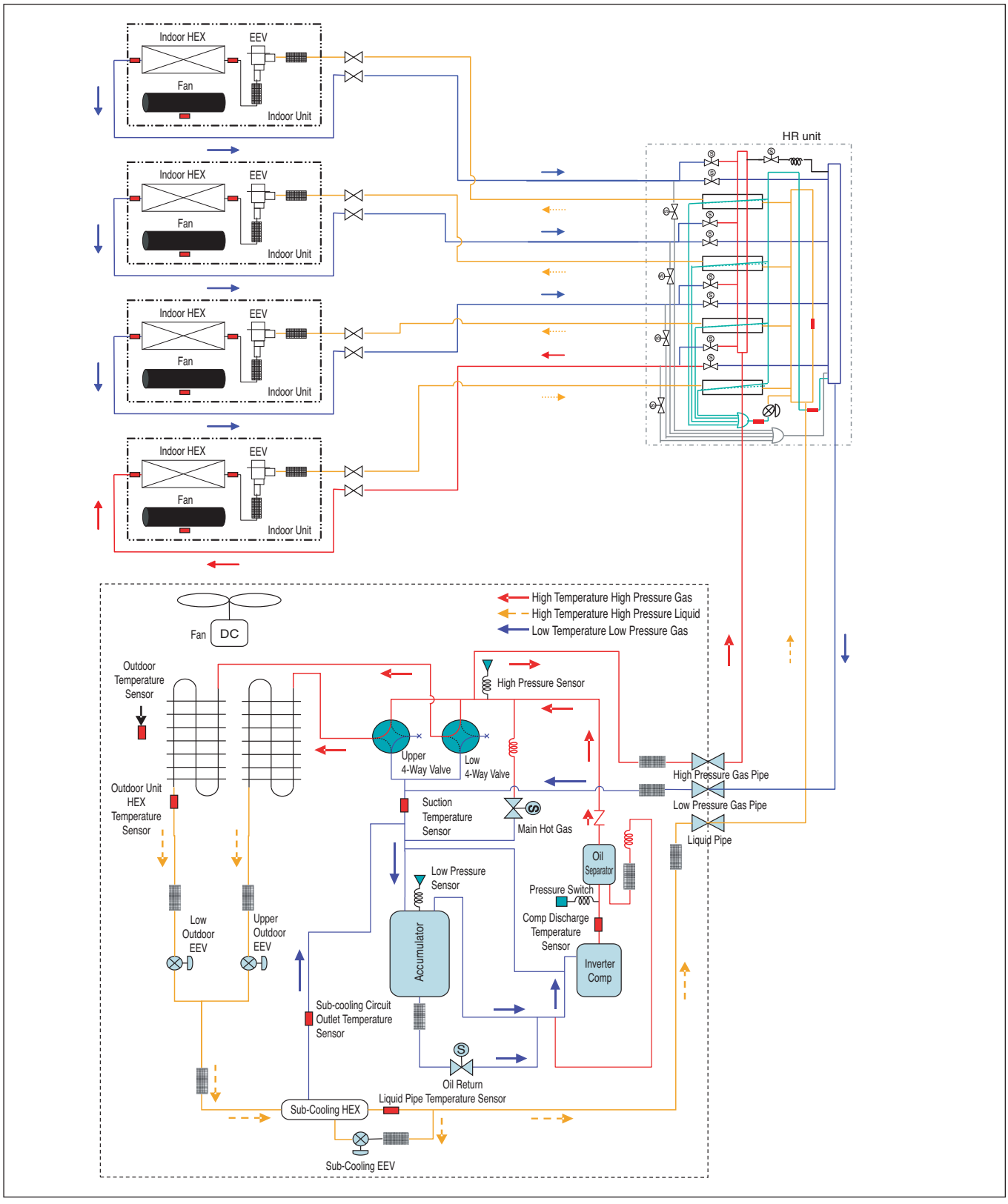

Remarks				
	Pressure Sensor	Temperature Sensor	Check valve	Solenoid valve
	Pressure Switch	SVC Valve	EEV	Strainer

Copyright ©2011 LG Electronics. Inc. All right reserved.
Only for training and service purposes

LGE Internal Use Only

Simultaneous Operation Mode 2(Heating Based Operation)

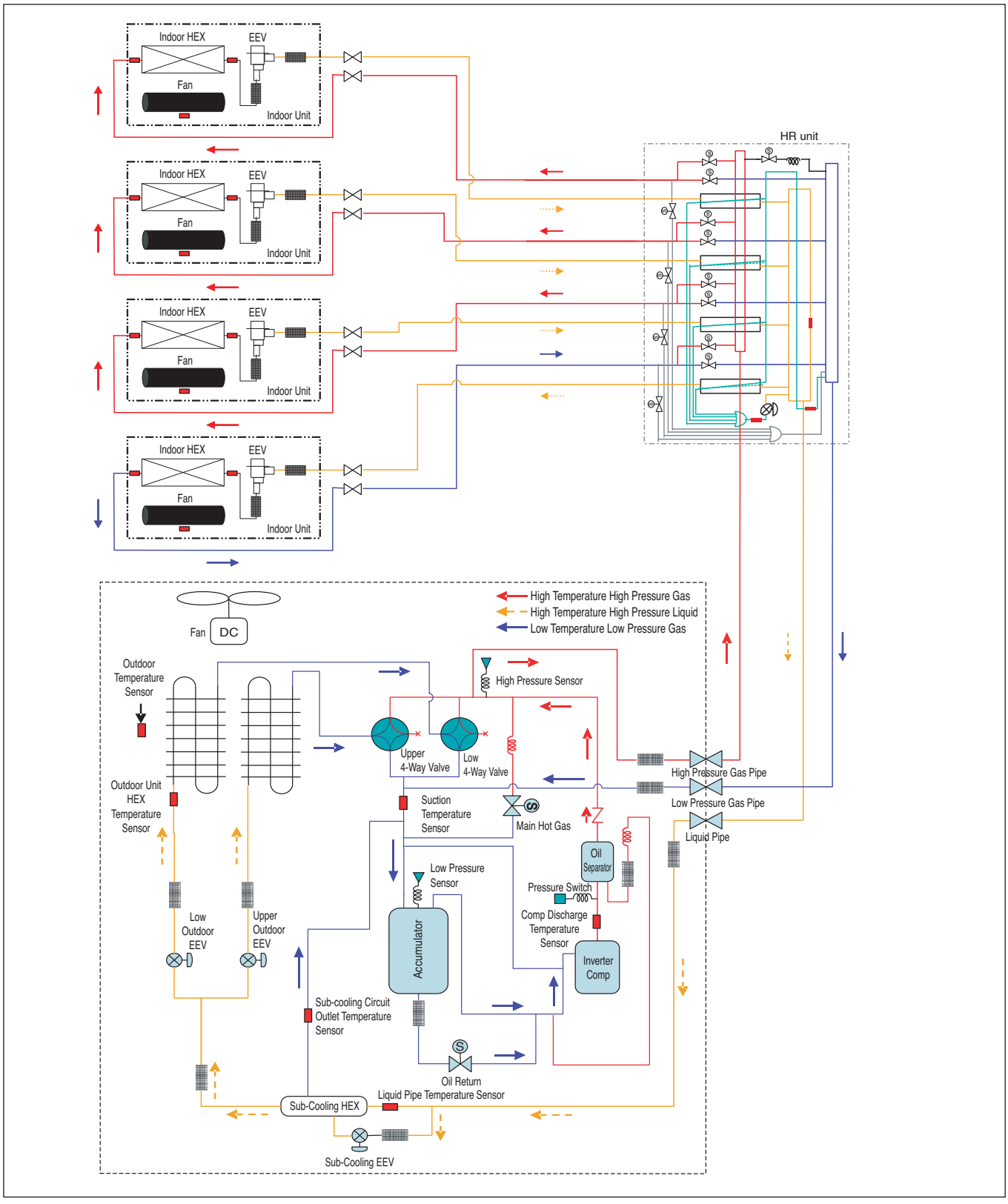

Remarks				
	Pressure Sensor	Temperature Sensor	Check valve	Solenoid valve
	Pressure Switch	SVC Valve	EEV	Strainer

Copyright ©2011 LG Electronics. Inc. All right reserved.
Only for training and service purposes

LGE Internal Use Only

Simultaneous Operation Mode 3(Heating and Cooling Operation)

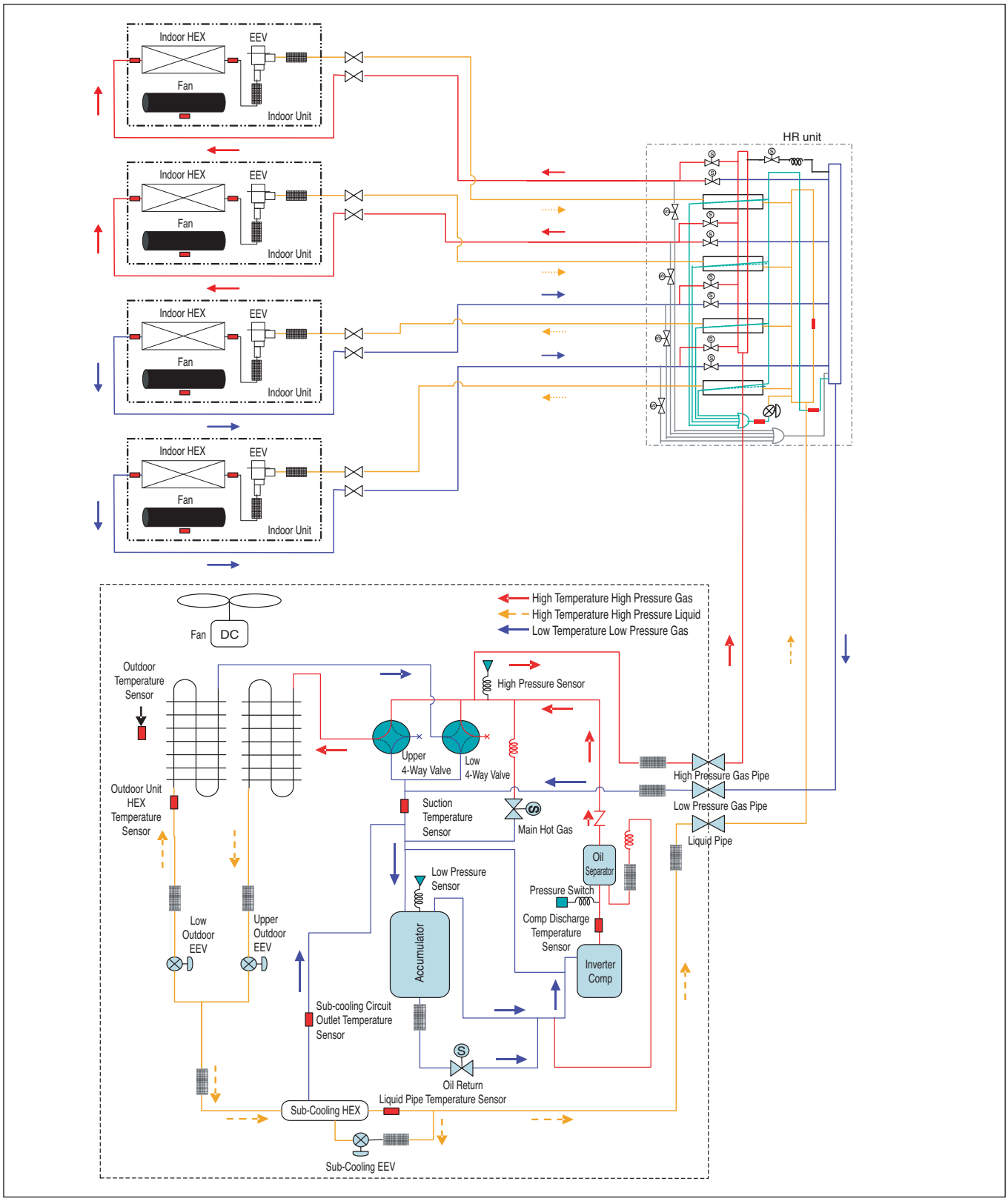

Remarks				
	Pressure Sensor	Temperature Sensor	Check valve	Solenoid valve
	Pressure Switch	SVC Valve	EEV	Strainer

Copyright ©2011 LG Electronics. Inc. All right reserved.
Only for training and service purposes

LGE Internal Use Only

4.1.2 10,12,14Hp(UX3 2 COMP)

Cooling Operation

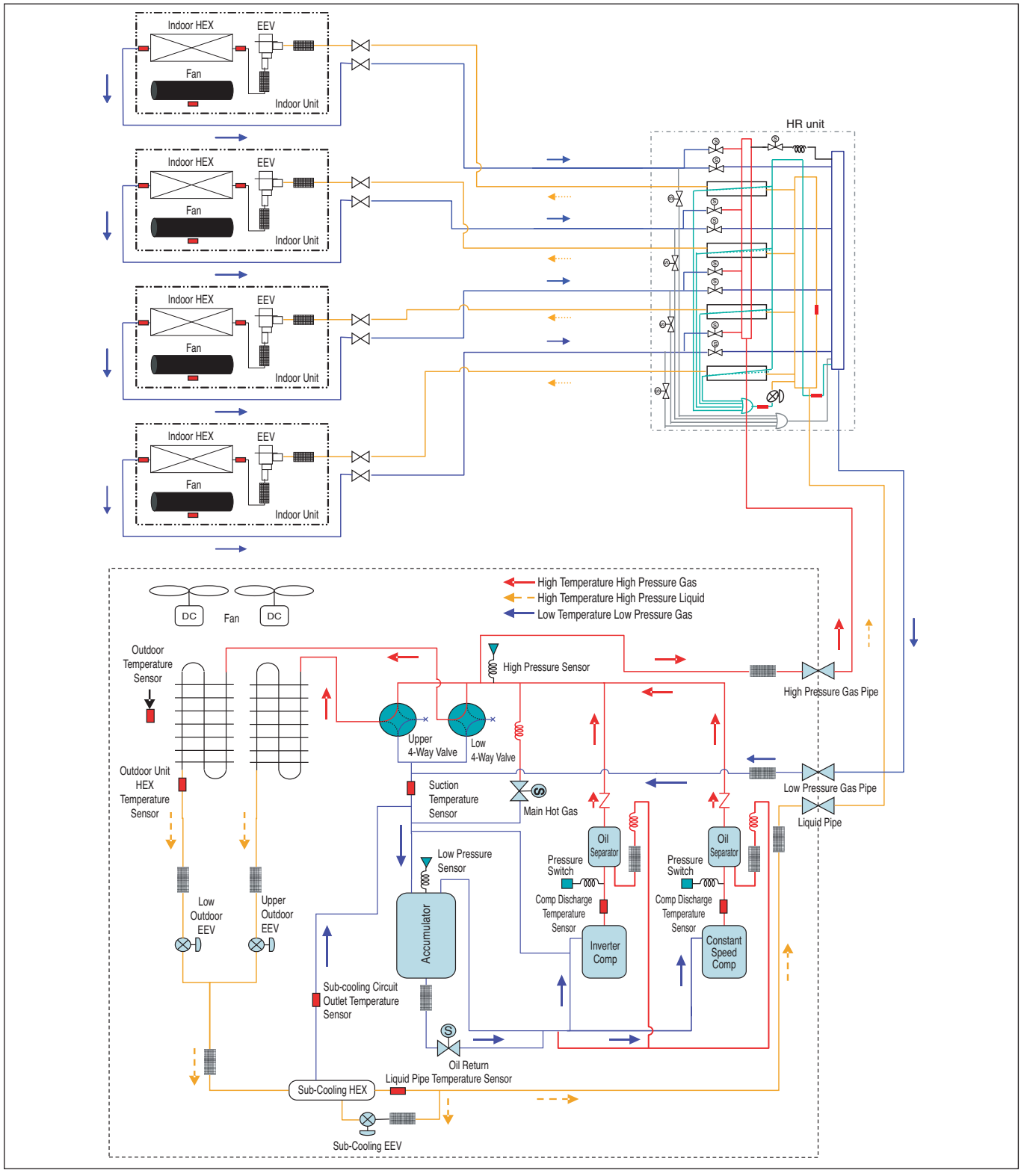

Remarks				
	Pressure Sensor	Temperature Sensor	Check valve	Solenoid valve
	Pressure Switch	SVC Valve	EEV	Strainer

Copyright ©2011 LG Electronics. Inc. All right reserved.
Only for training and service purposes

LGE Internal Use Only

Cooling Operation at low ambient temperature

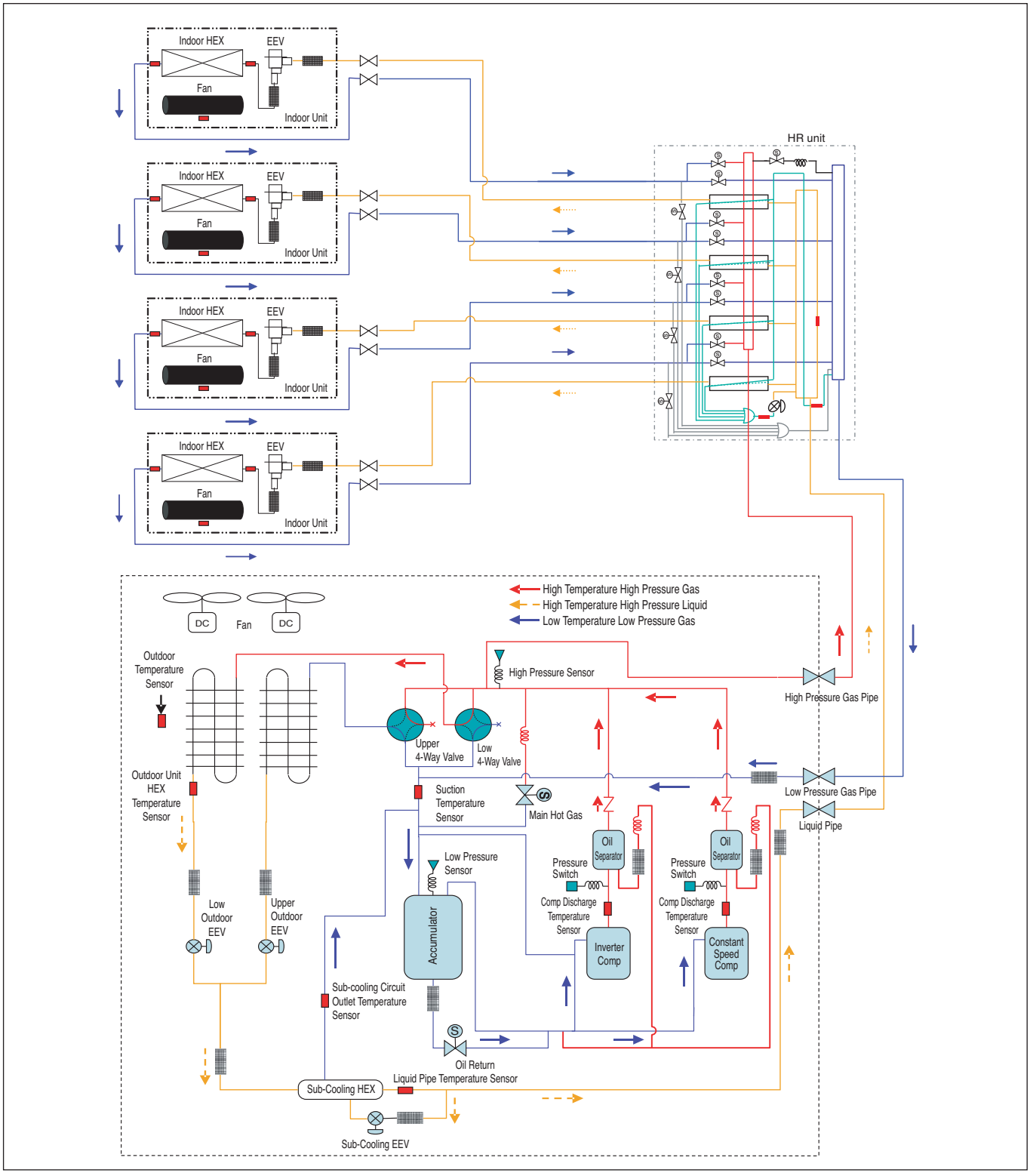

Remarks				
	Pressure Sensor	Temperature Sensor	Check valve	Solenoid valve
	Pressure Switch	SVC Valve	EEV	Strainer

Copyright ©2011 LG Electronics. Inc. All right reserved.
Only for training and service purposes

LGE Internal Use Only

Heating Operation

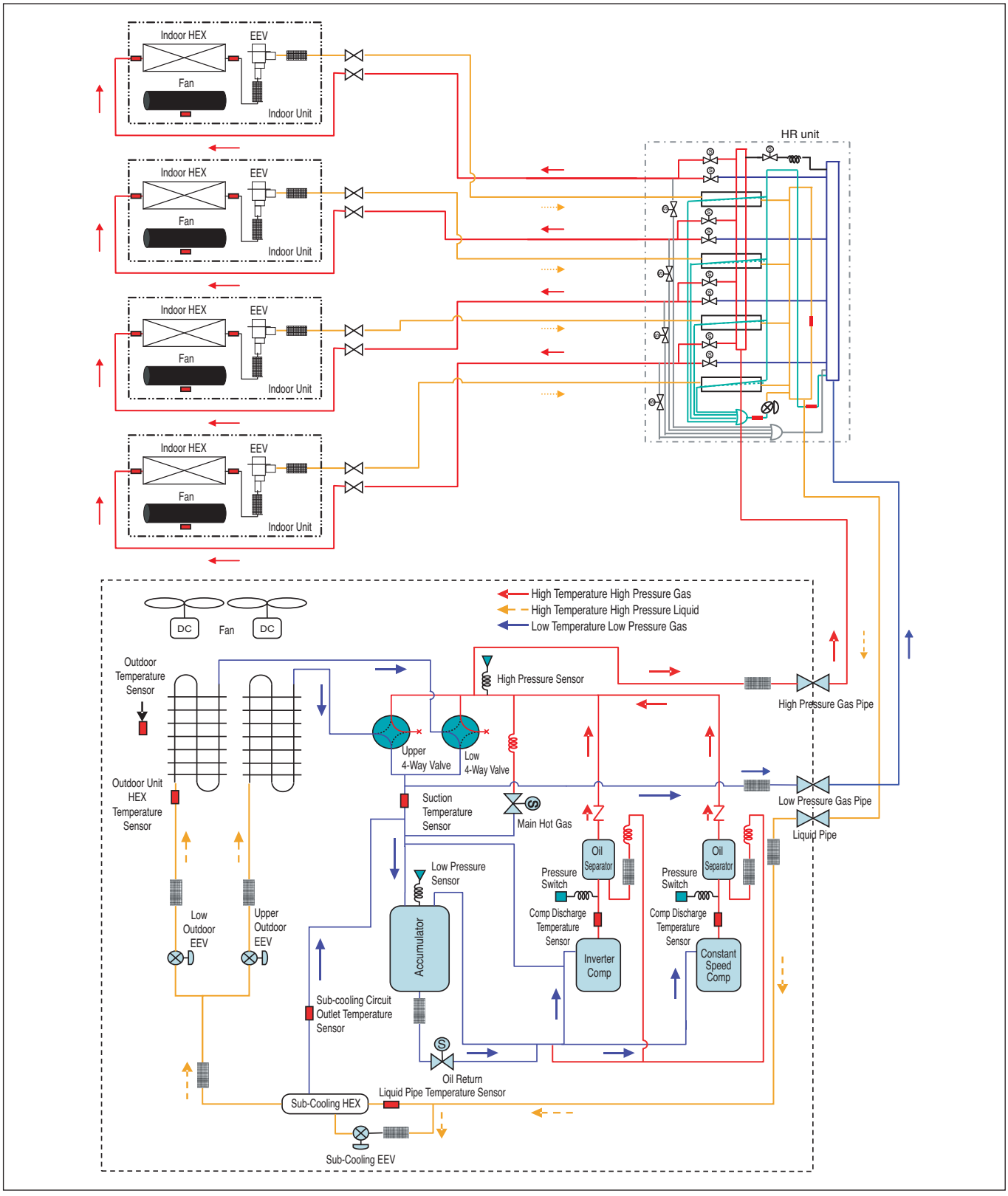

Remarks				
	Pressure Sensor	Temperature Sensor	Check valve	Solenoid valve
	Pressure Switch	SVC Valve	EEV	Strainer

Copyright ©2011 LG Electronics. Inc. All right reserved.
Only for training and service purposes

LGE Internal Use Only

Oil Return/ Defrost Operation

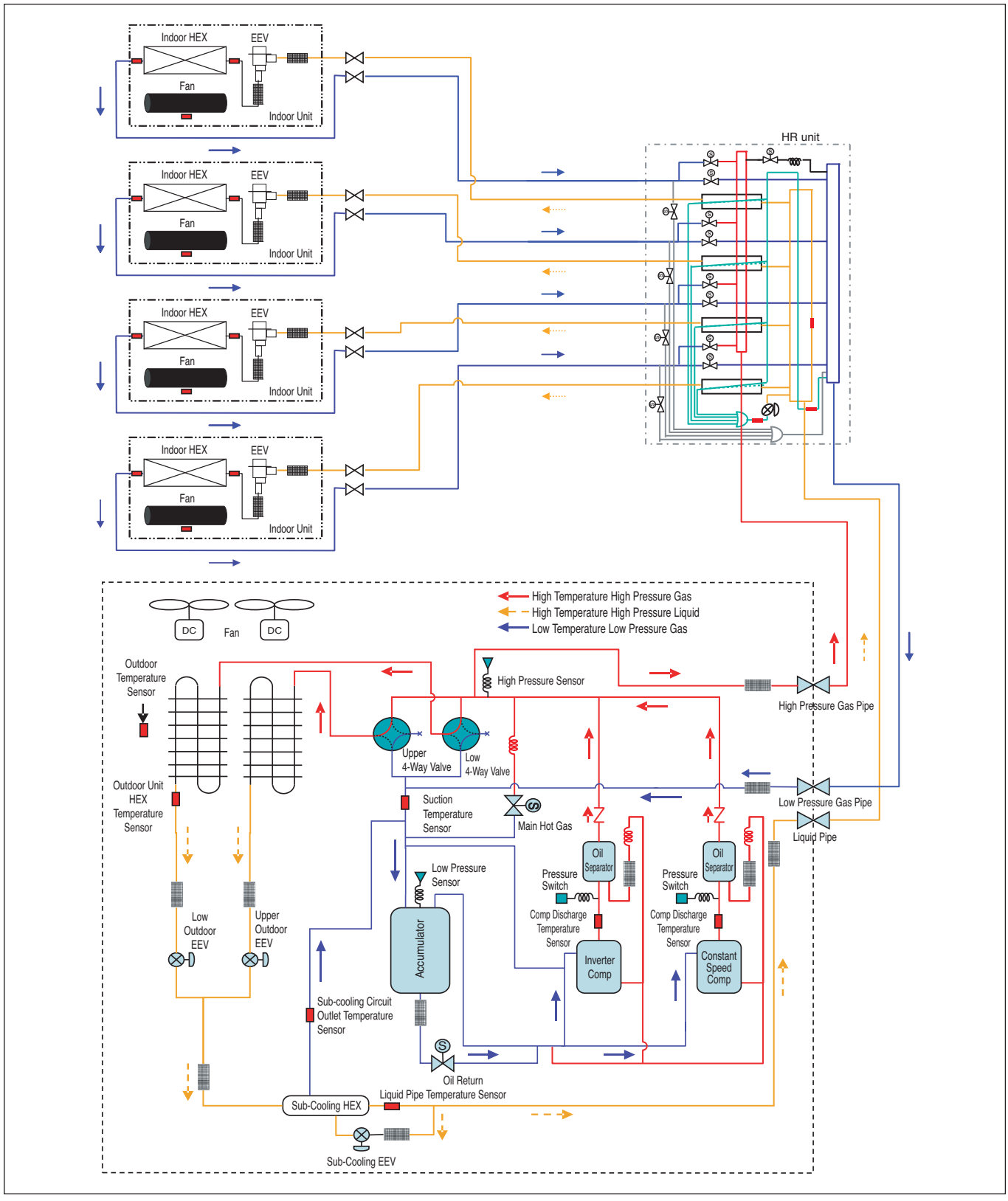

Remarks				
	Pressure Sensor	Temperature Sensor	Check valve	Solenoid valve
	Pressure Switch	SVC Valve	EEV	Strainer

Copyright ©2011 LG Electronics. Inc. All right reserved.
Only for training and service purposes

LGE Internal Use Only

Simultaneous Operation Mode 1(Cooling Based Operation)

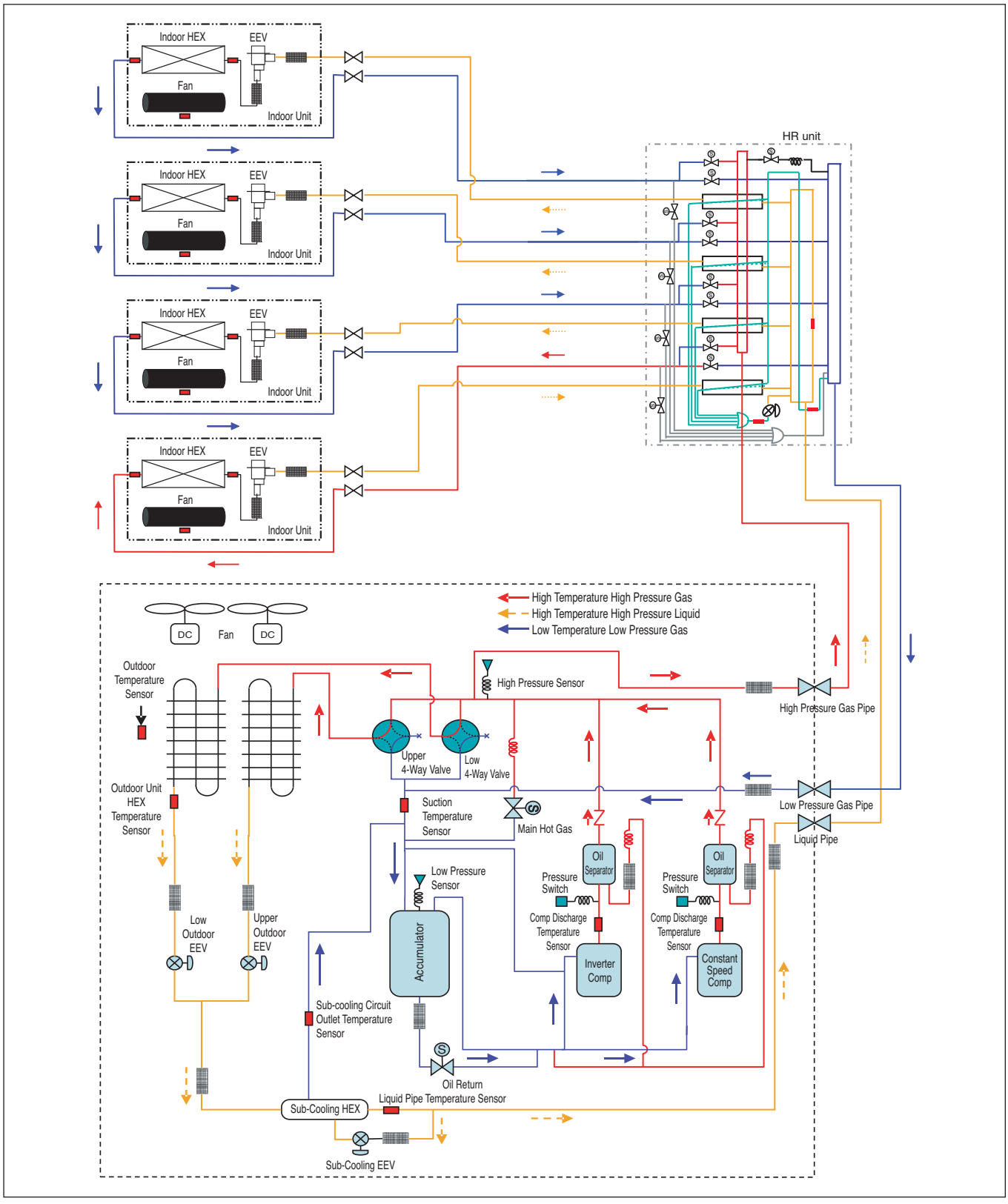

Remarks				
	Pressure Sensor	Temperature Sensor	Check valve	Solenoid valve
	Pressure Switch	SVC Valve	EEV	Strainer

Copyright ©2011 LG Electronics. Inc. All right reserved.
Only for training and service purposes

LGE Internal Use Only

Simultaneous Operation Mode 2(Heating Based Operation)

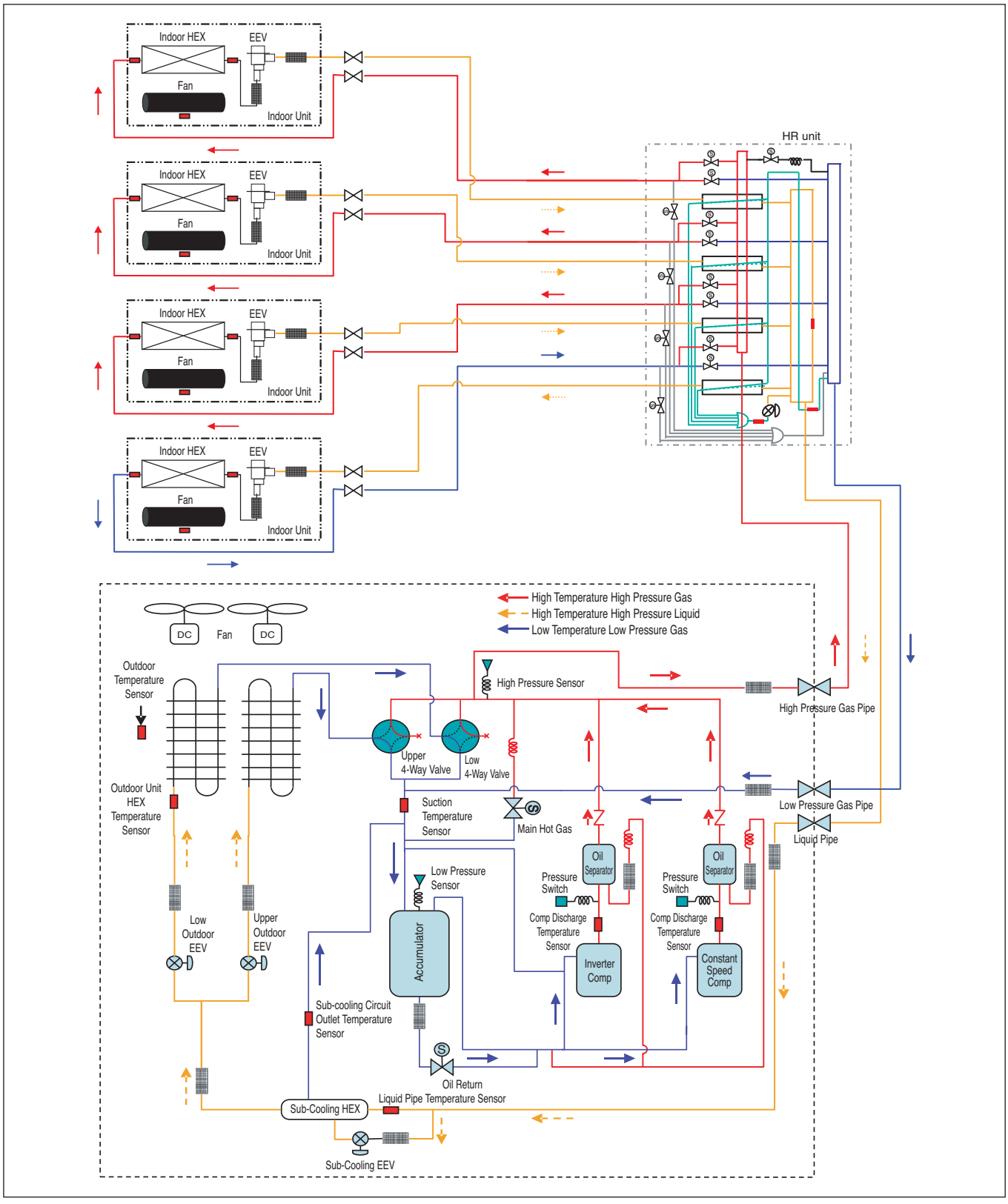

Remarks				
	Pressure Sensor	Temperature Sensor	Check valve	Solenoid valve
	Pressure Switch	SVC Valve	EEV	Strainer

Copyright ©2011 LG Electronics. Inc. All right reserved.
Only for training and service purposes

LGE Internal Use Only

Simultaneous Operation Mode 3(Heating and Cooling Operation)

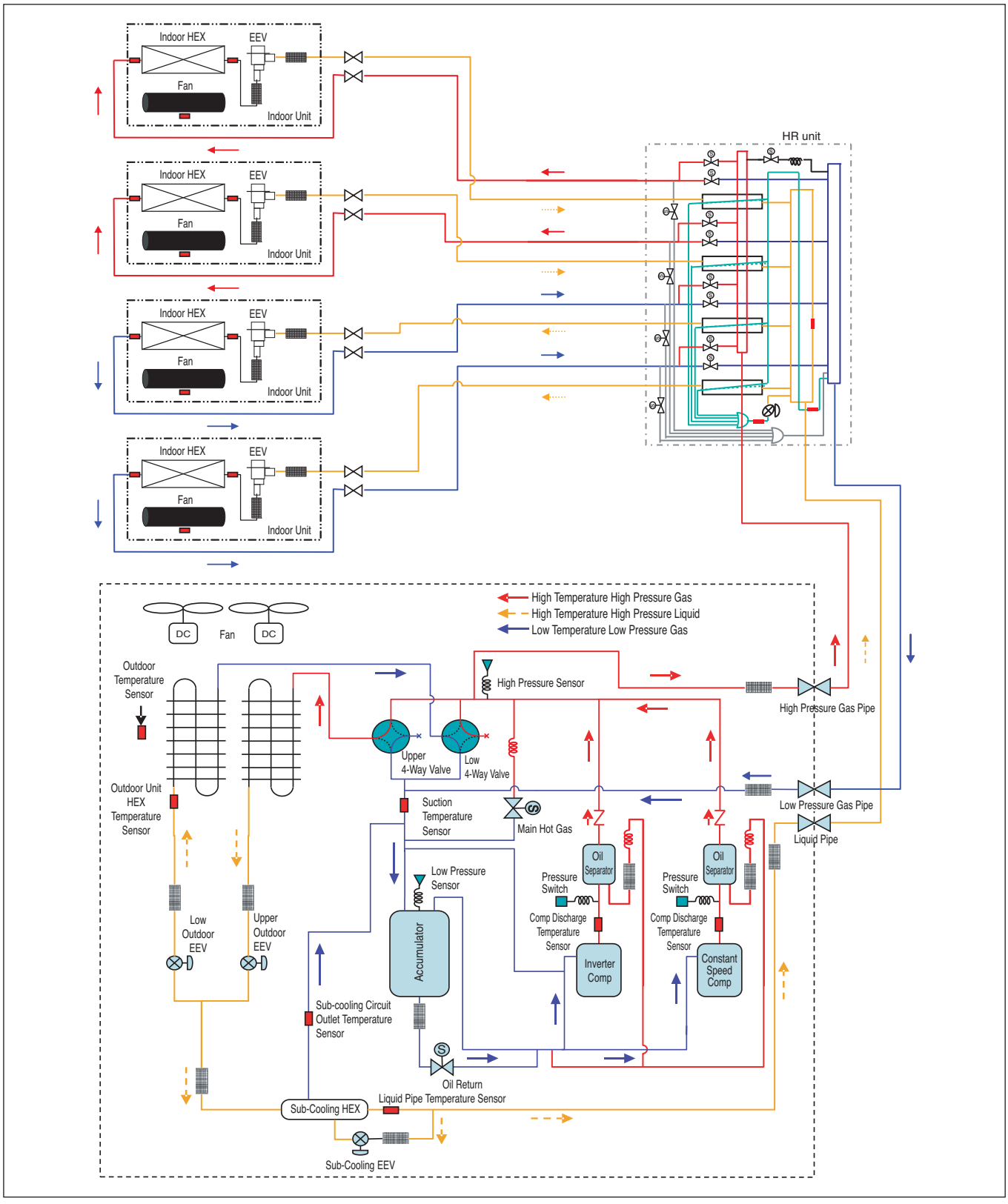

Remarks				
	Pressure Sensor	Temperature Sensor	Check valve	Solenoid valve
	Pressure Switch	SVC Valve	EEV	Strainer

Copyright ©2011 LG Electronics. Inc. All right reserved.
Only for training and service purposes

LGE Internal Use Only

5. Wiring Diagrams

5.1 Heat Recovery Model

5.1.1 8HP(UX2 1Comp., 460V, 60Hz)

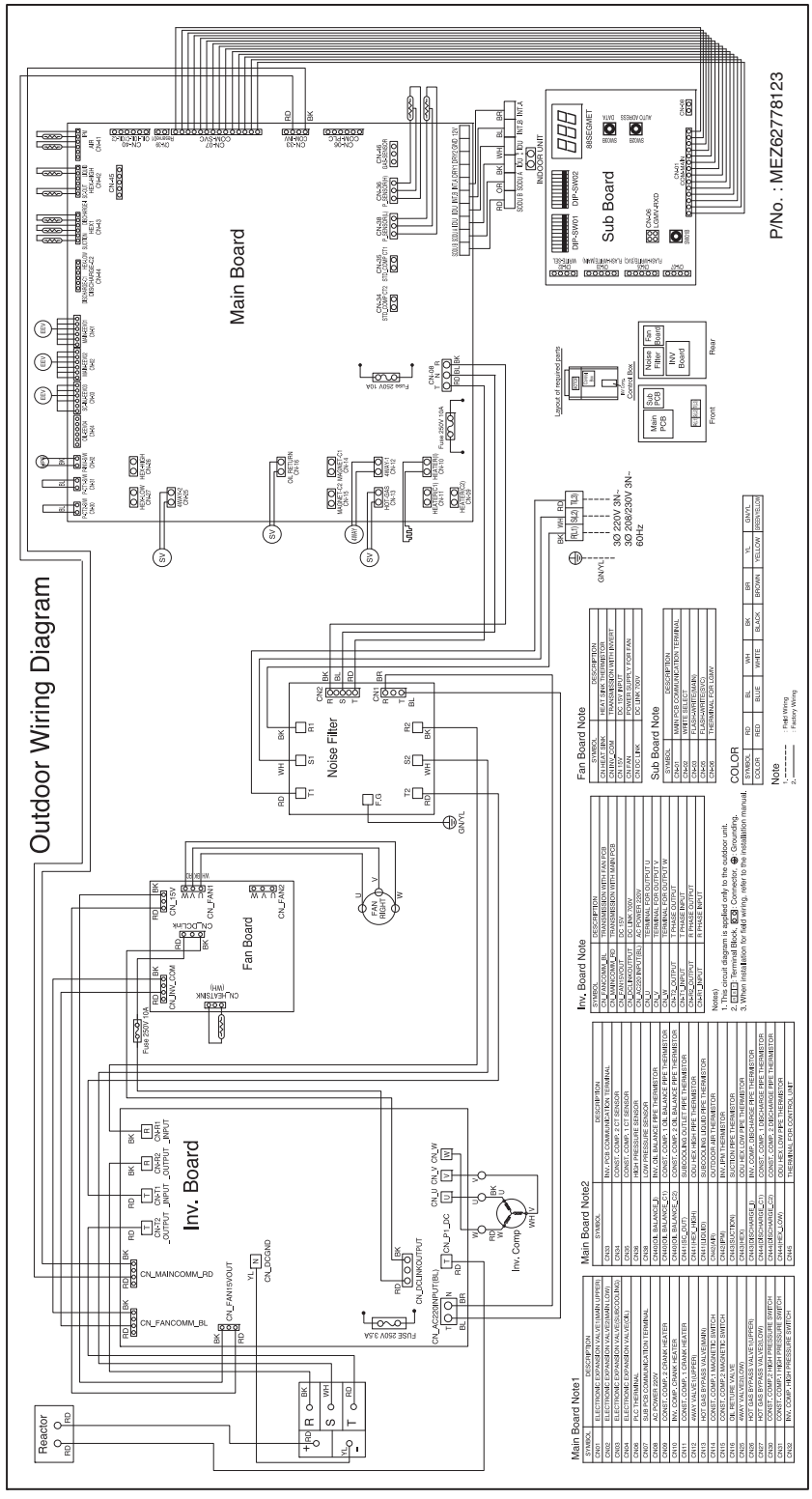

Copyright ©2011 LG Electronics. Inc. All right reserved.
Only for training and service purposes

LGE Internal Use Only

5.1.2 10,12,14Hp(UX3 2 COMP, 460V, 60Hz)

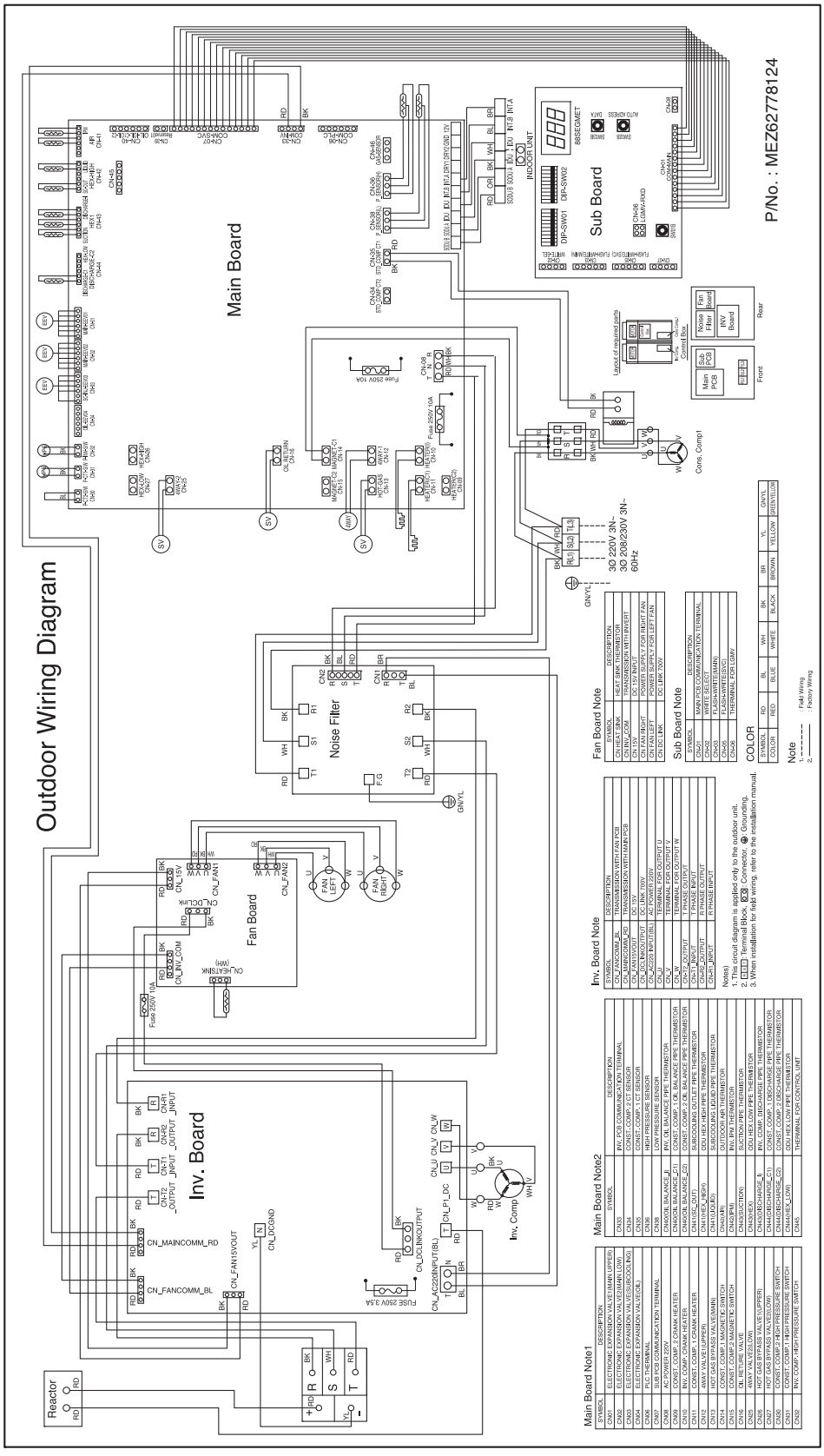

Copyright ©2011 LG Electronics. Inc. All right reserved.
Only for training and service purposes

LGE Internal Use Only

5.1.3 8HP(UX2 1Comp. ,208/230V, 60Hz)

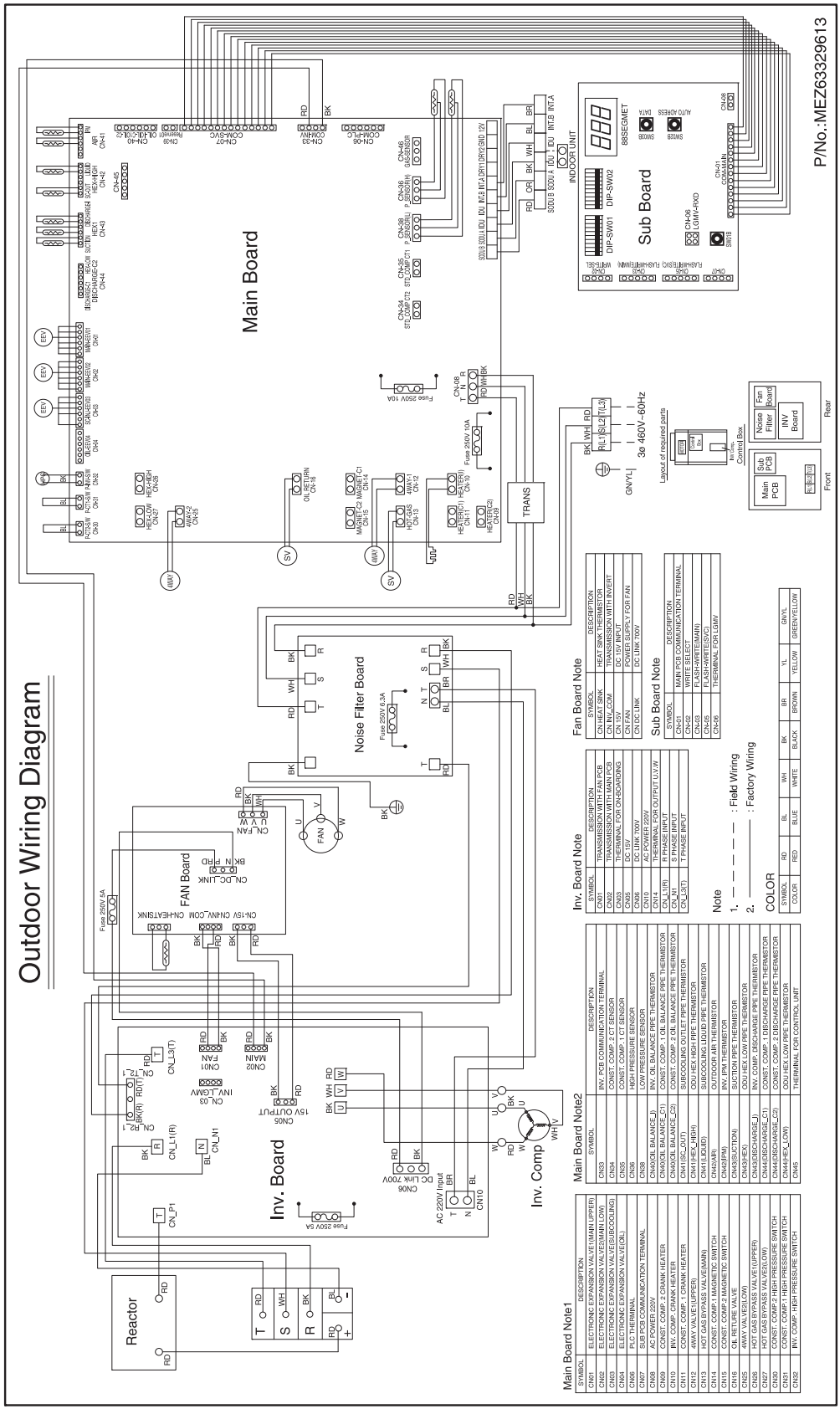

Copyright ©2011 LG Electronics. Inc. All right reserved.
Only for training and service purposes

LGE Internal Use Only

5.1.4 10,12,14Hp(UX3 2 COMP ,208/230V, 60Hz))

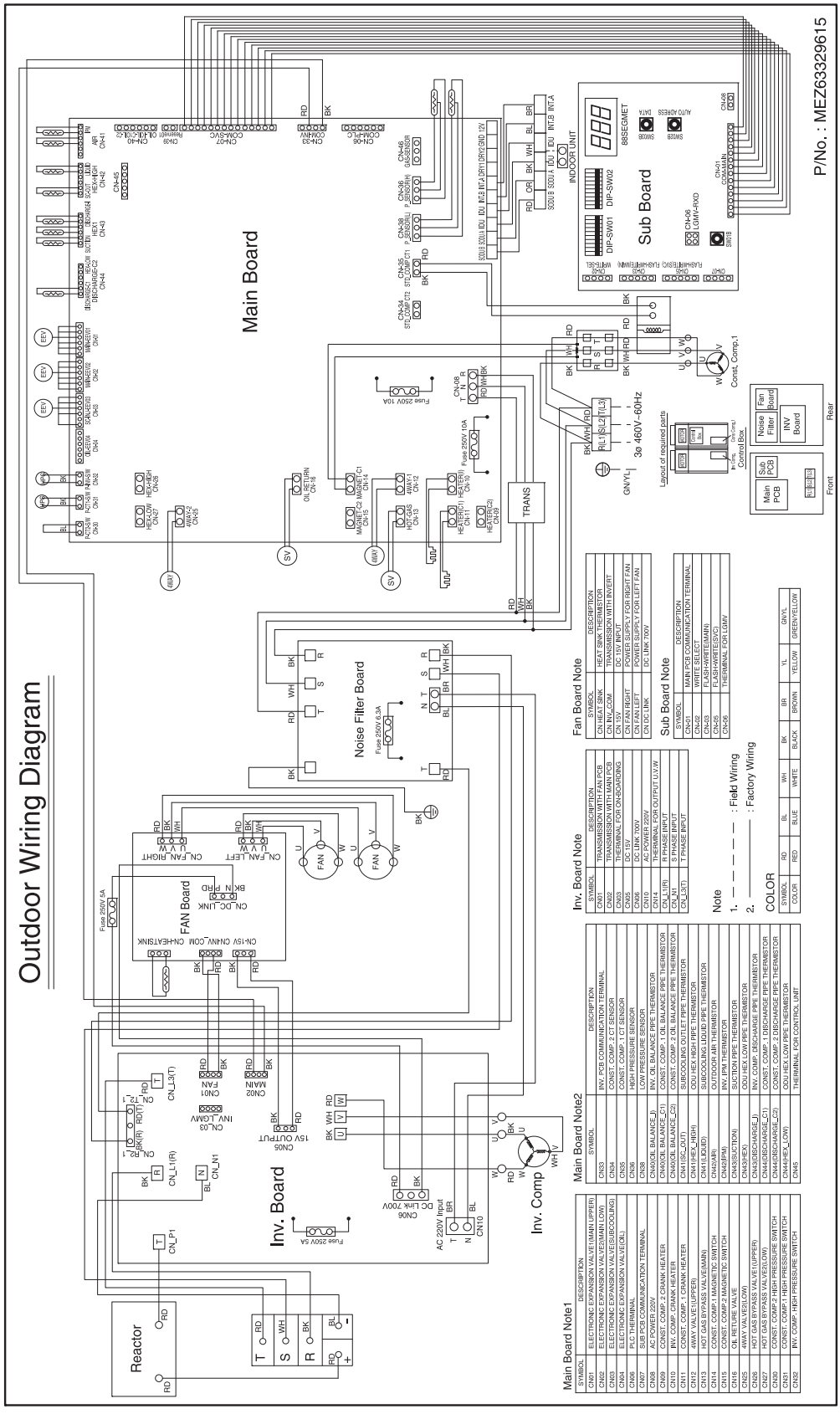

Copyright ©2011 LG Electronics. Inc. All right reserved.
Only for training and service purposes

LGE Internal Use Only

Description of PCB

■ Main PCB

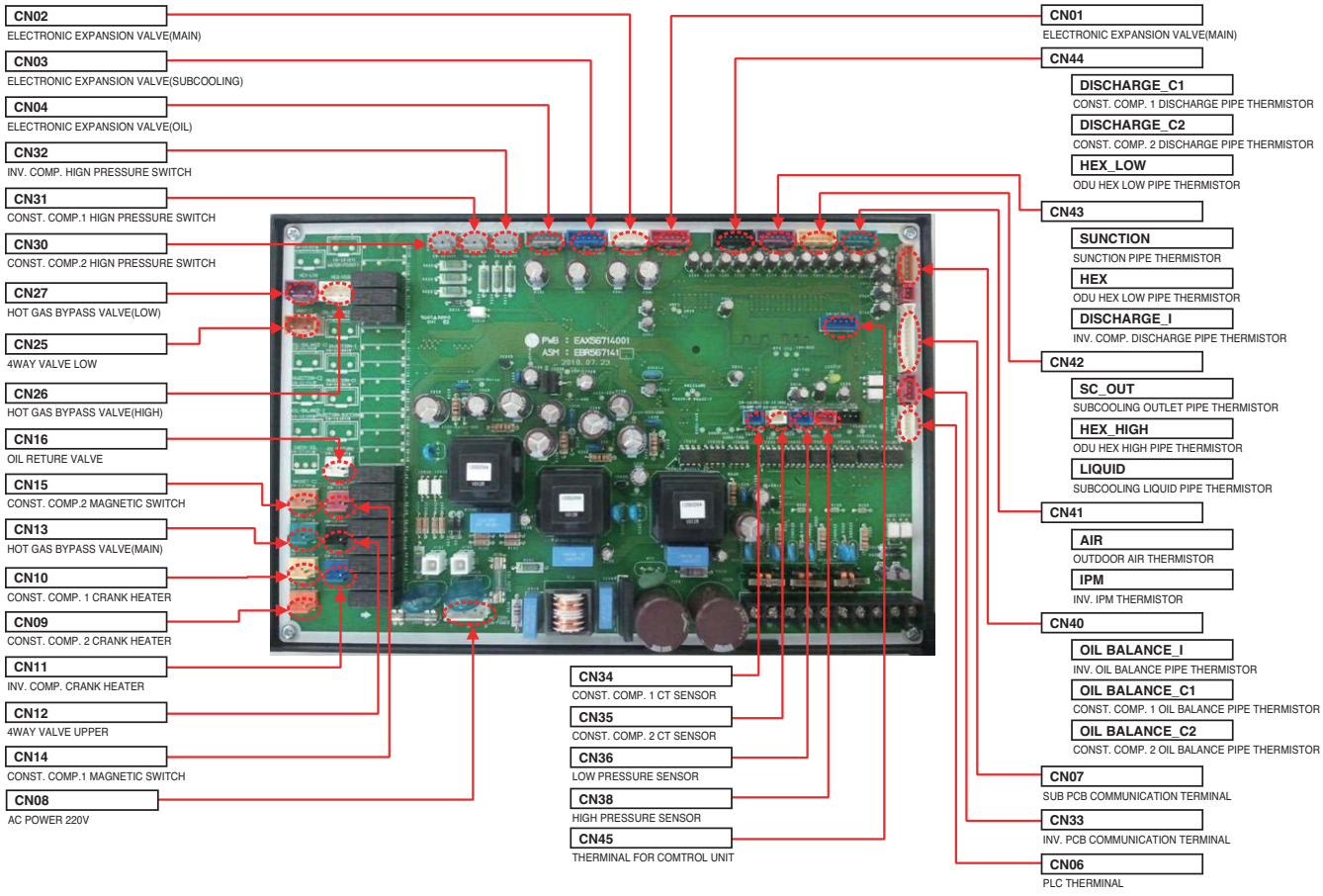

■ SUB PCB

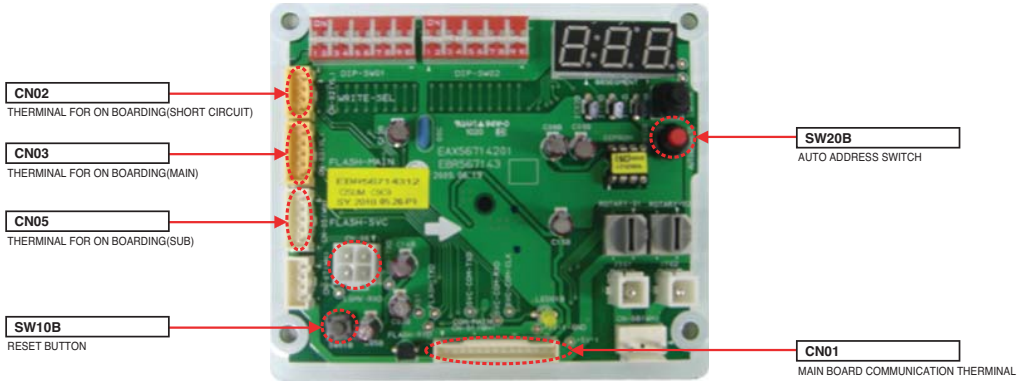

Copyright ©2011 LG Electronics. Inc. All right reserved.
Only for training and service purposes

LGE Internal Use Only

■ Noise Filter(460V, 60Hz)

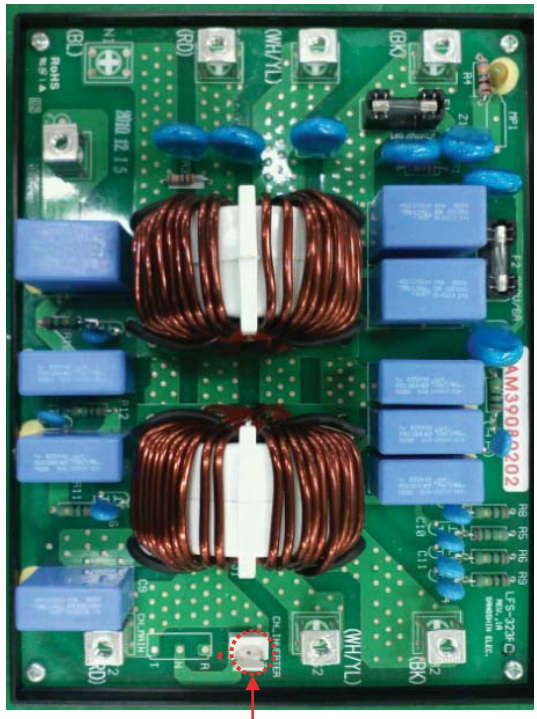

TO INV. PCB
220V Power Output Terminal

■ Inverter PCB(460V, 60Hz)

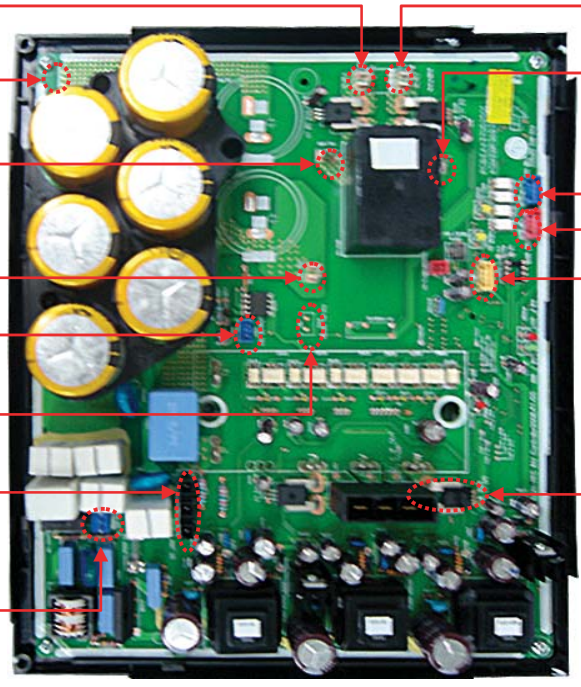

CN_T2_1
R Phase Terminal

CN_P1
T Phase Terminal

CN_L1(R)
R Phase Terminal

CN_N1
N Phase Terminal

CN13 15V OUTPUT
DC 15V Output Terminal

CN04 PFC LGMV
PFC Onboarding Terminal

CN12 DC LINK 700 V
(700V DC LINK)

CN06 AC 220V INPUT
220V Power Input Terminal

CN_R2_1
T Phase Terminal

CN_L3(T)
T Phase Terminal

CN01 FAN
Communication Terminal to Fan PCB

CN02 MAIN
Communication Terminal to Main PCB

CN03 INV LGMV
INV Onboarding Terminal

CH14 U.V.W OUT
UVW Output Terminal

Copyright ©2011 LG Electronics. Inc. All right reserved.
Only for training and service purposes

LGE Internal Use Only

■ FAN PCB(UX2)(460V, 60Hz)

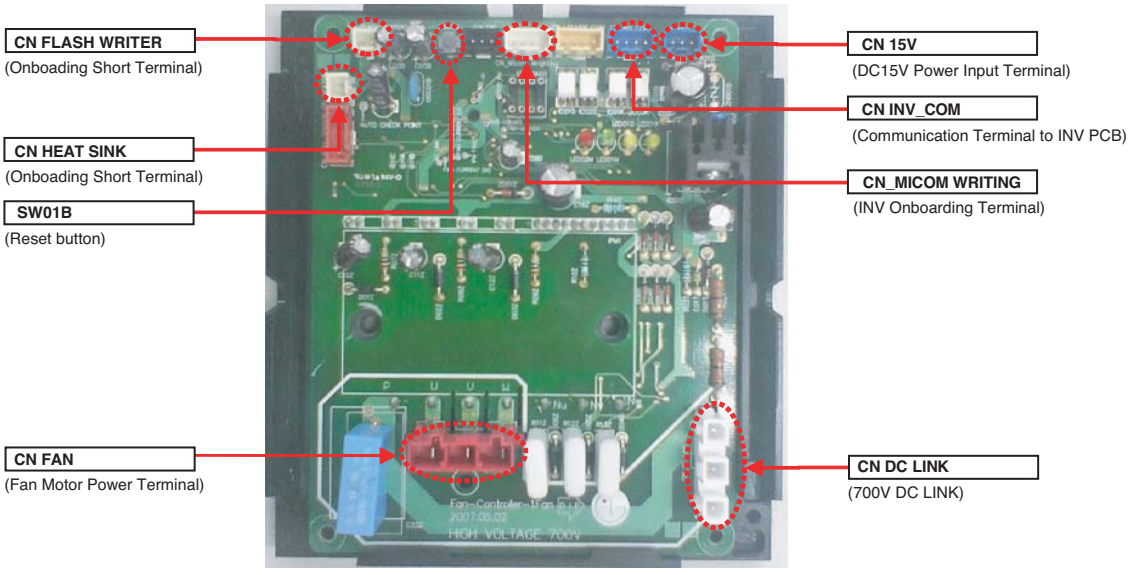

■ FAN PCB(UX3)(460V, 60Hz)

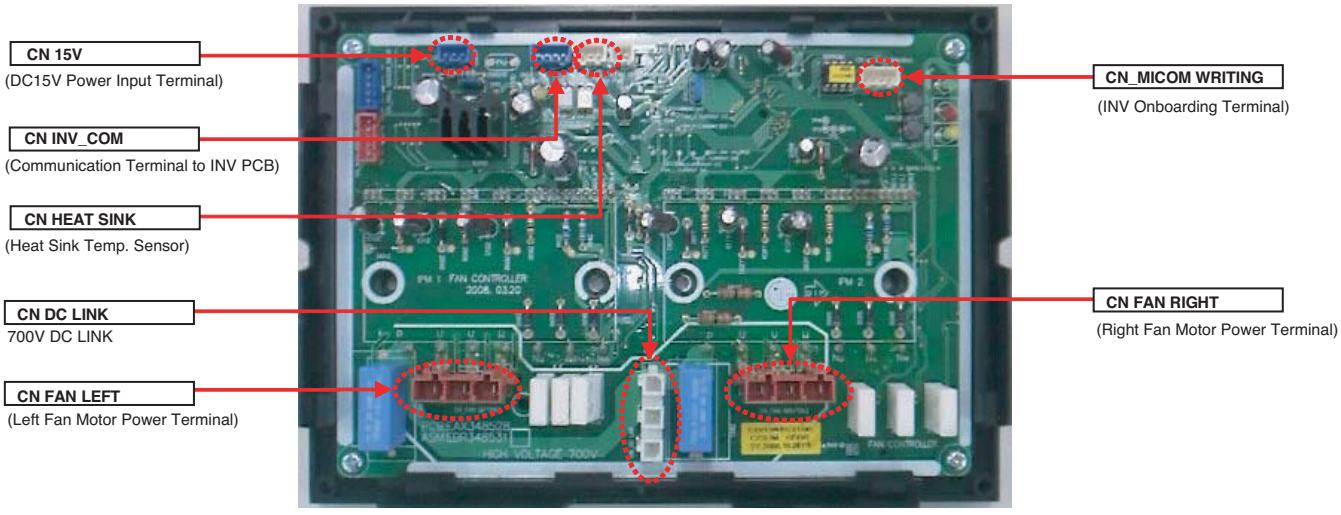

Copyright ©2011 LG Electronics. Inc. All right reserved.
Only for training and service purposes

LGE Internal Use Only

■ Noise Filter(208/230V, 60Hz)

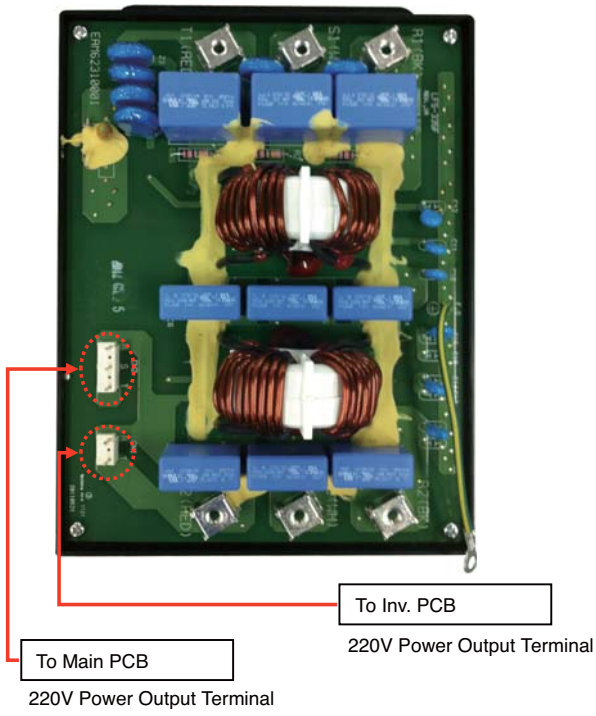

■ Inverter PCB(208/230V, 60Hz)

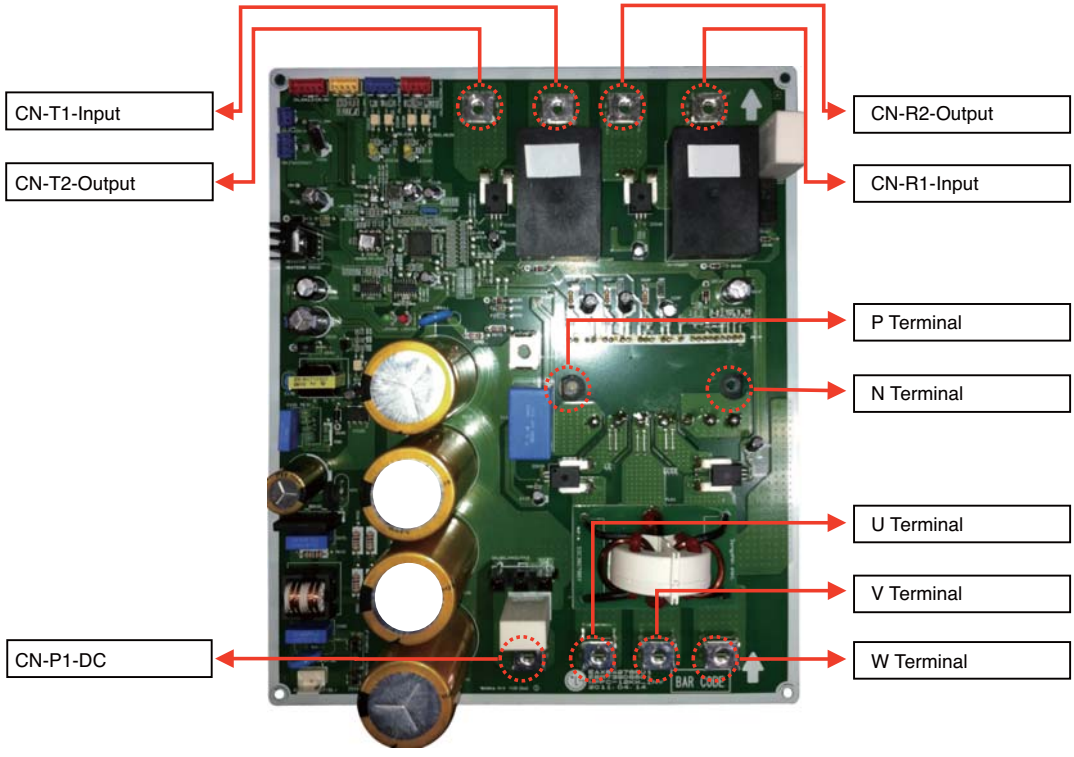

Copyright ©2011 LG Electronics. Inc. All right reserved.
Only for training and service purposes

LGE Internal Use Only

■ FAN PCB(UX2)(208/230V, 60Hz)

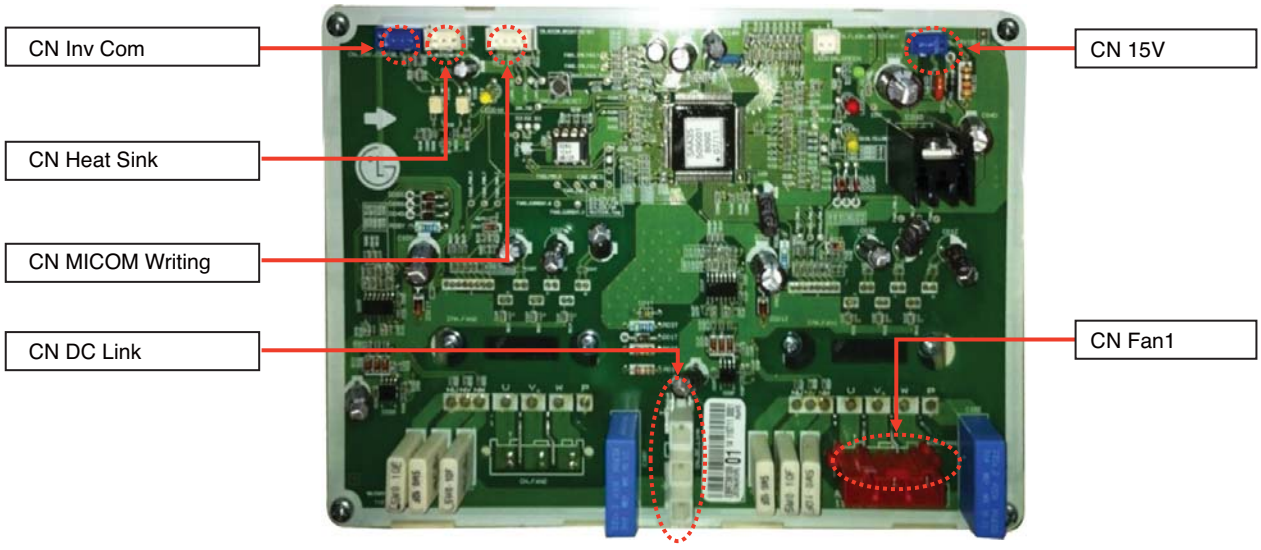

■ FAN PCB(UX3)(208/230V, 60Hz)

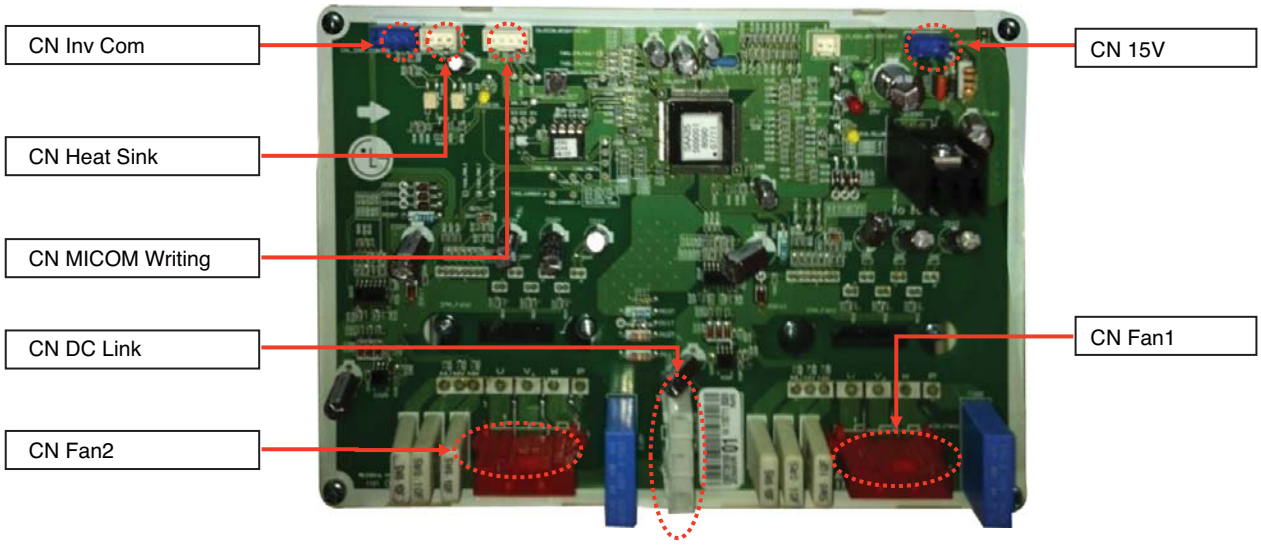

Copyright ©2011 LG Electronics. Inc. All right reserved.
Only for training and service purposes

LGE Internal Use Only

6. Exploded View

Outdoor Unit

6.1 Heat Recovery Model

6.1.1 8HP(UX2 1Comp. , 460V, 60Hz)

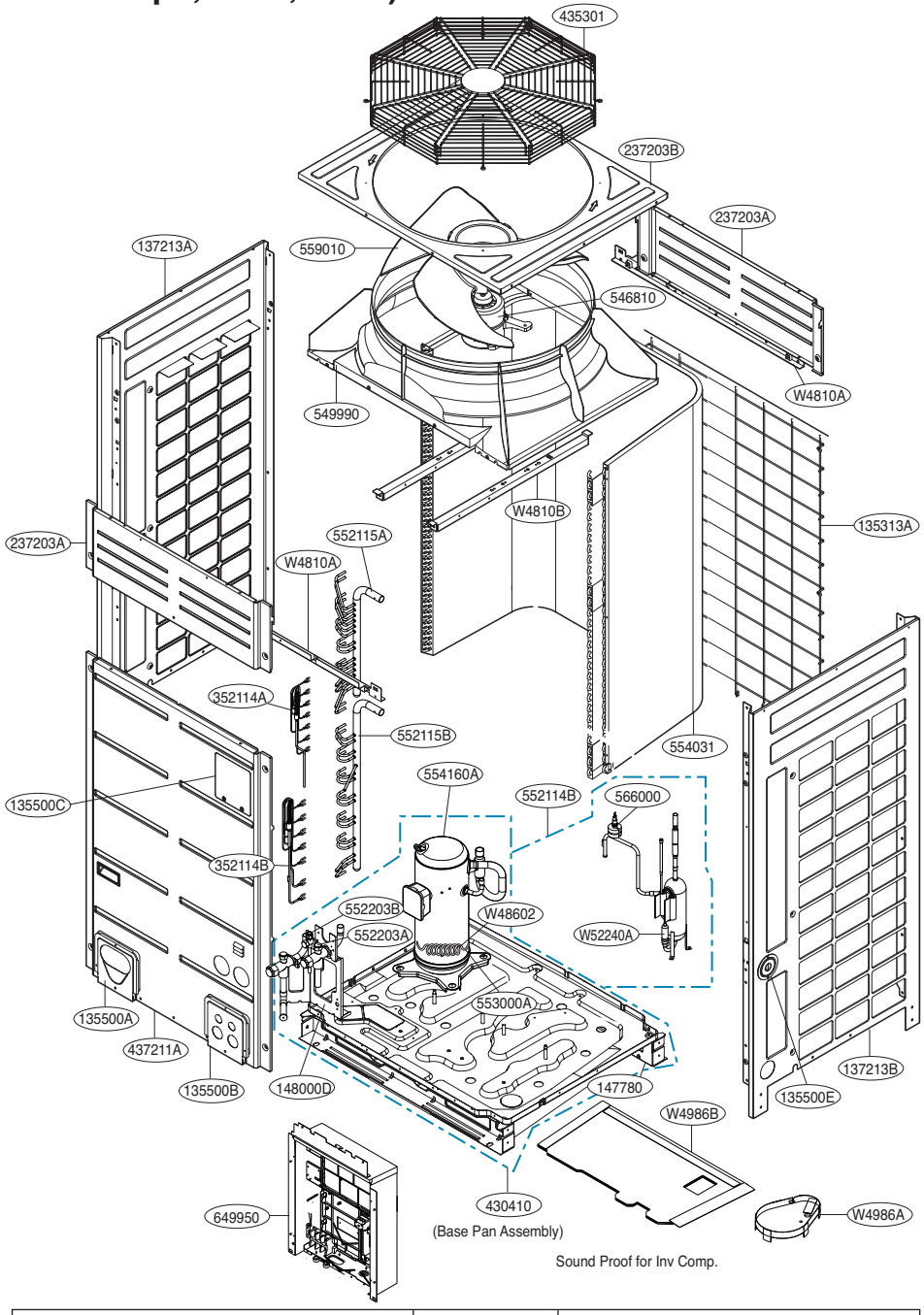

Part	L/No.	Remark
Inv Comp. Heater	553000A	Housing Color : Blue
Heater Spring	W48602	-
Low HEX3 Temp. Sensor	263230C	Housing Color : Black

Copyright ©2011 LG Electronics. Inc. All right reserved.
Only for training and service purposes

LGE Internal Use Only

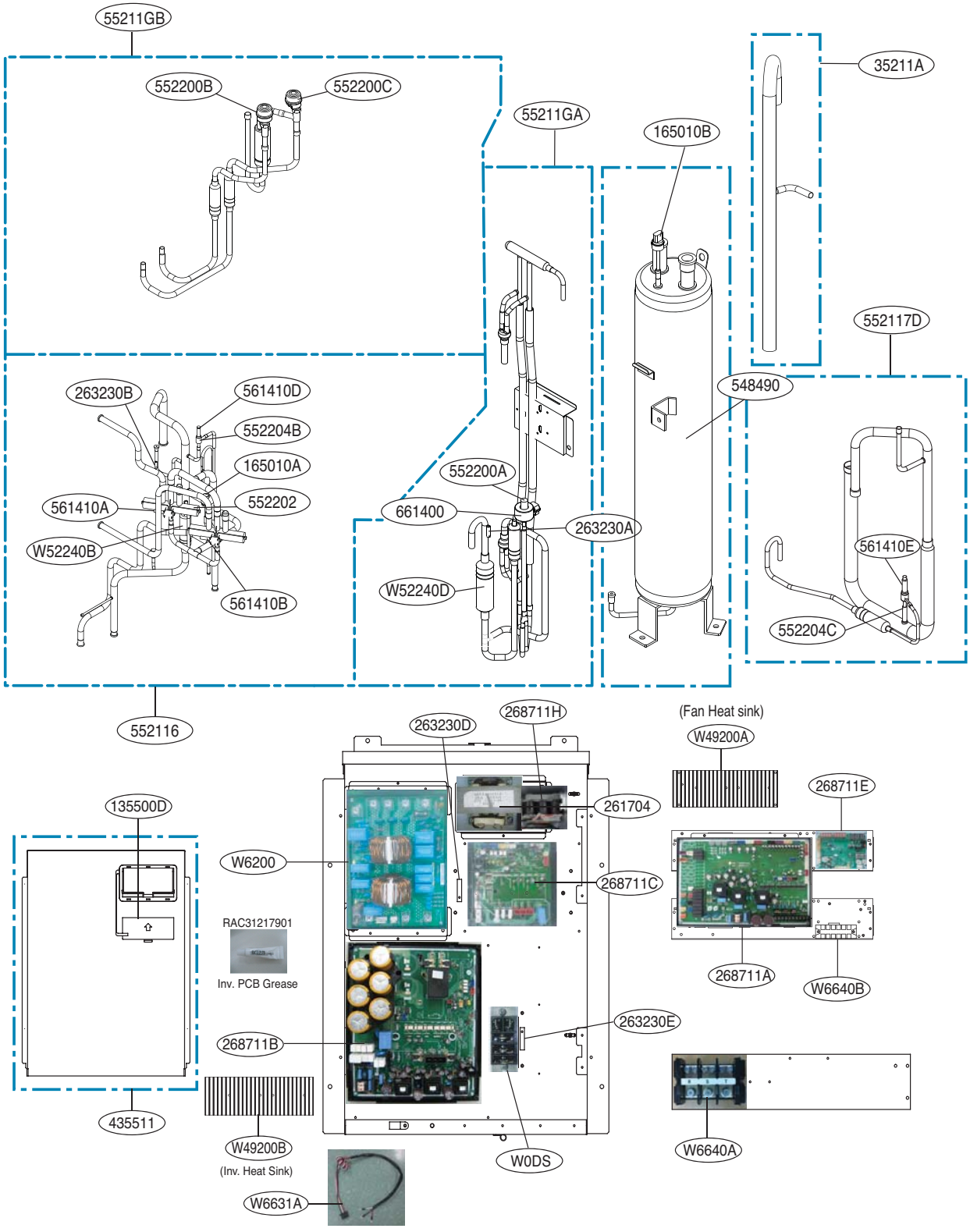

Part	L/No.	Sensor location	Remark
Temp. Sensor 1	263230A	Sub Cool Out + HEX2(Upper Temp. Sensor) + Liquid Pipe	Housing Color : Yellow
Temp. Sensor 2	263230B	Suction Pipe + HEX1(Temp. Sensor) + Inv. Discharge	Housing Color : Purple
Temp. Sensor 3	263230E	Air + Inv. IPM	Housing Color : Green

Copyright ©2011 LG Electronics. Inc. All right reserved.
Only for training and service purposes

LGE Internal Use Only

6.1.2 10,12,14Hp(UX3 2 COMP, 460V, 60Hz)

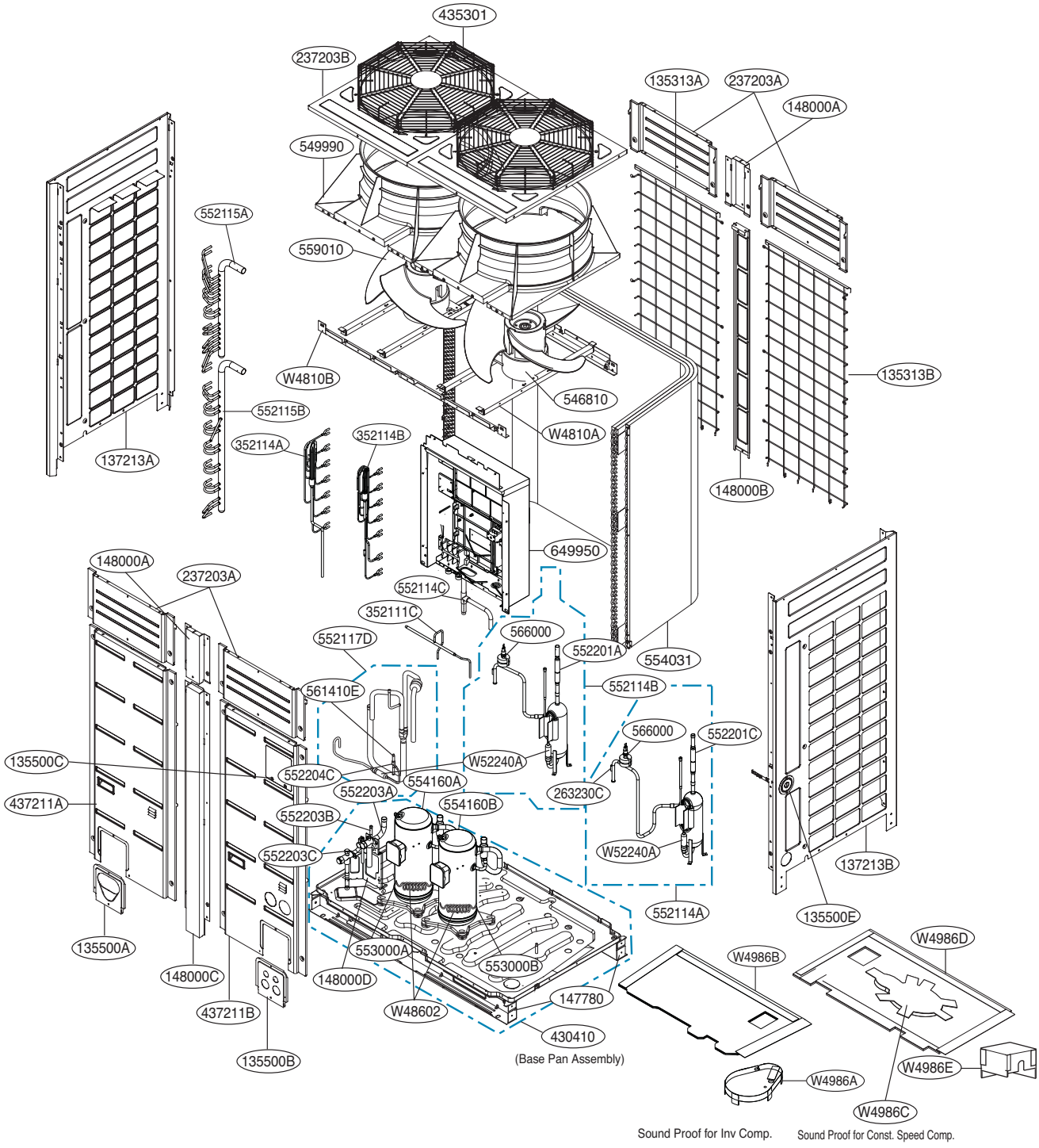

Part	L/No.	Remark
Inv Comp. Heater	553000A	Housing Color : Blue
Const. Speed Comp. Heater	553000B	Housing Color : Yellow
Heater Spring	W48602	-
Const. Speed Comp. Discharge + Low HEX3 Temp. Sensor	263230C	Housing Color : Black

Copyright ©2011 LG Electronics. Inc. All right reserved.
Only for training and service purposes

LGE Internal Use Only

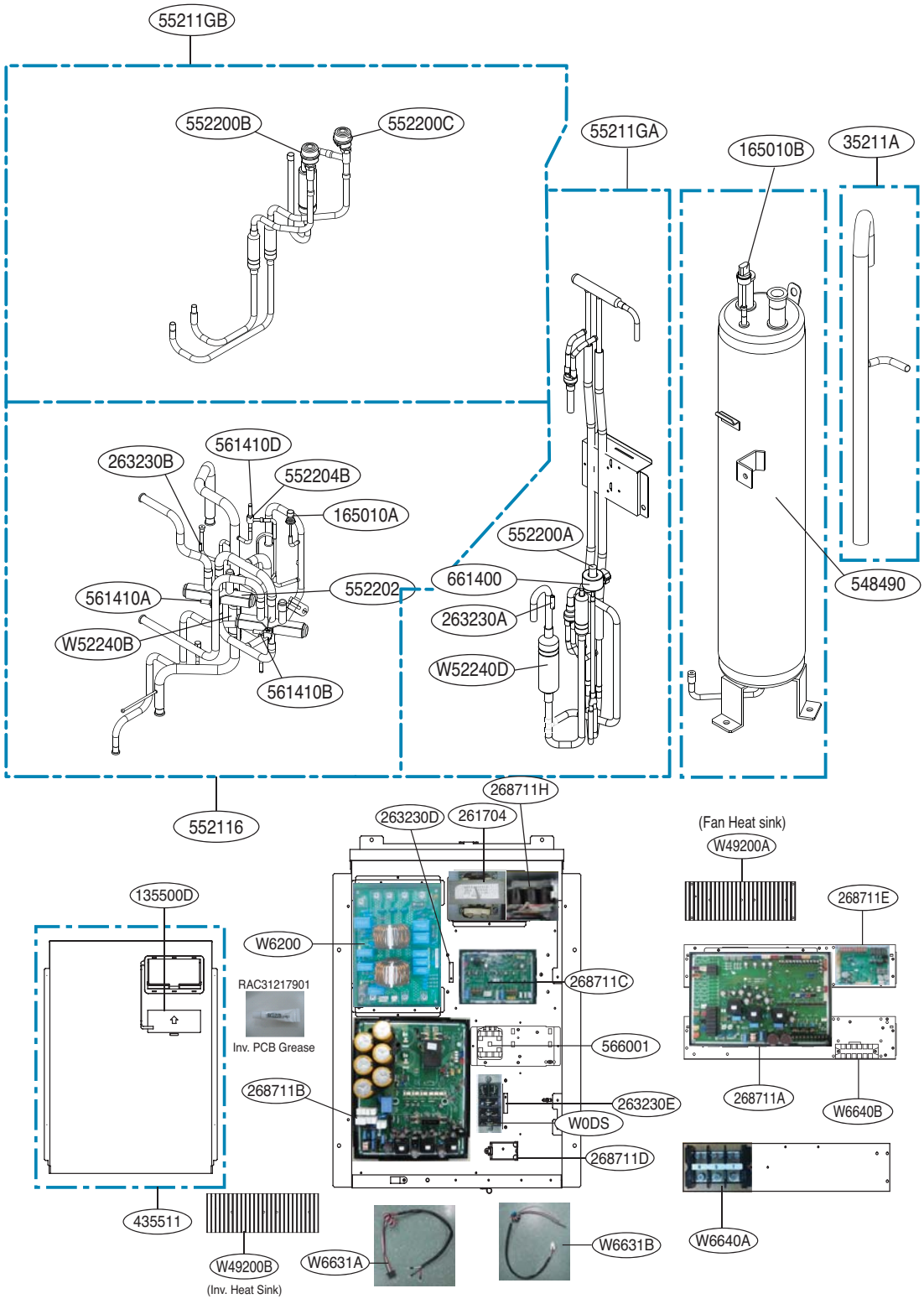

Part	L/No.	Sensor location	Remark
Temp. Sensor 1	263230A	Sub Cool Out + HEX2(Upper Temp. Sensor) + Liquid Pipe	Housing Color : Yellow
Temp. Sensor 2	263230B	Suction Pipe + HEX1(Temp. Sensor) + Inv. Discharge	Housing Color : Purple
Temp. Sensor 3	263230E	Air + Inv. IPM	Housing Color : Green

Copyright ©2011 LG Electronics. Inc. All right reserved.
Only for training and service purposes

LGE Internal Use Only

6.1.3 8HP(UX2 1Comp. , 208/230V, 60Hz)

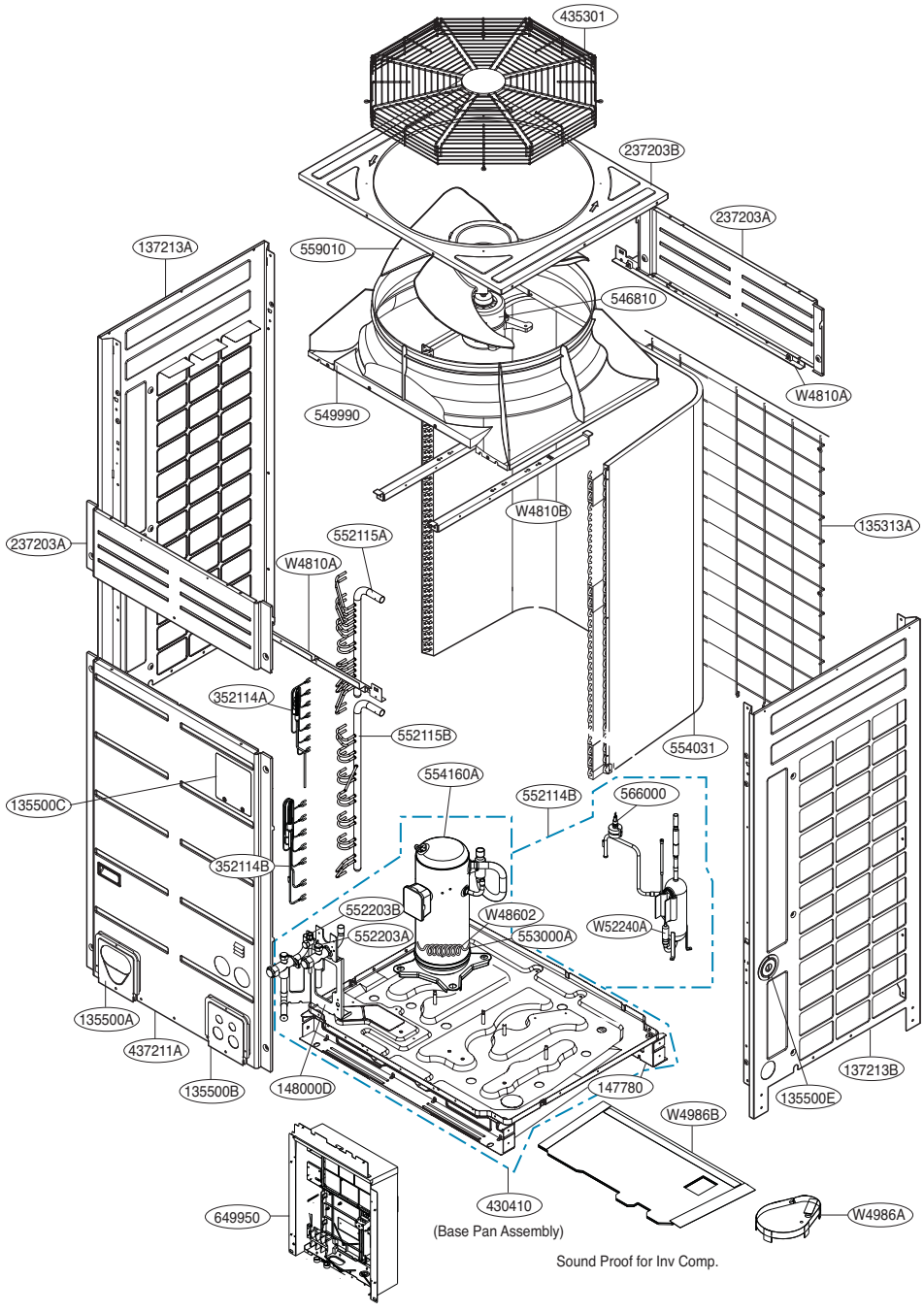

Part	L/No.	Remark
Inv Comp. Heater	553000A	Housing Color : Blue
Heater Spring	W48602	-
Low HEX3 Temp. Sensor	263230C	Housing Color : Black

Copyright ©2011 LG Electronics. Inc. All right reserved.
Only for training and service purposes

LGE Internal Use Only

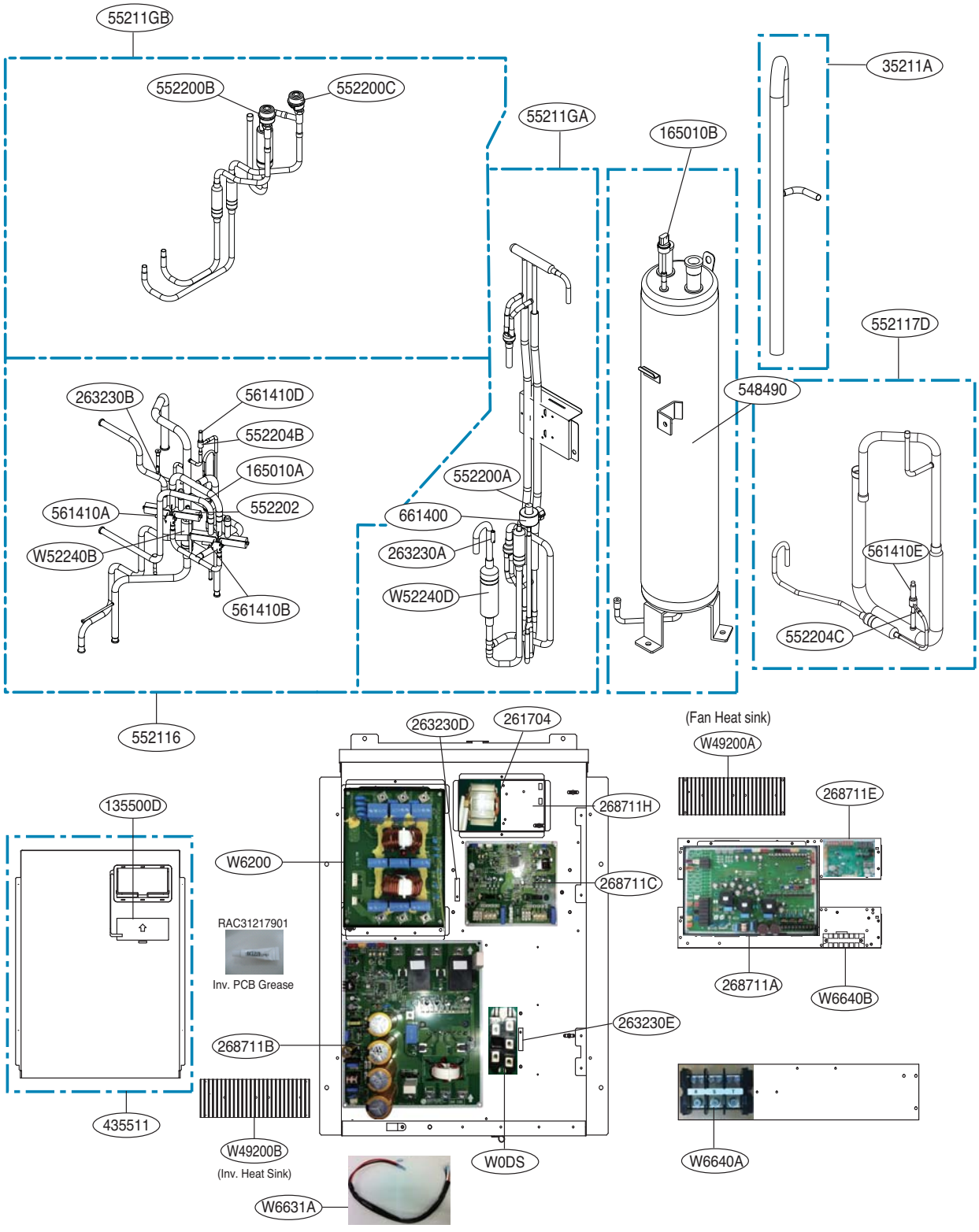

Part	L/No.	Sensor location	Remark
Temp. Sensor 1	263230A	Sub Cool Out + HEX2(Upper Temp. Sensor) + Liquid Pipe	Housing Color : Yellow
Temp. Sensor 2	263230B	Suction Pipe + HEX1(Temp. Sensor) + Inv. Discharge	Housing Color : Purple
Temp. Sensor 3	263230E	Air + Inv. IPM	Housing Color : Green

Copyright ©2011 LG Electronics. Inc. All right reserved.
Only for training and service purposes

LGE Internal Use Only

6.1.4 10,12,14Hp(UX3 2 COMP, 208/230V, 60Hz)

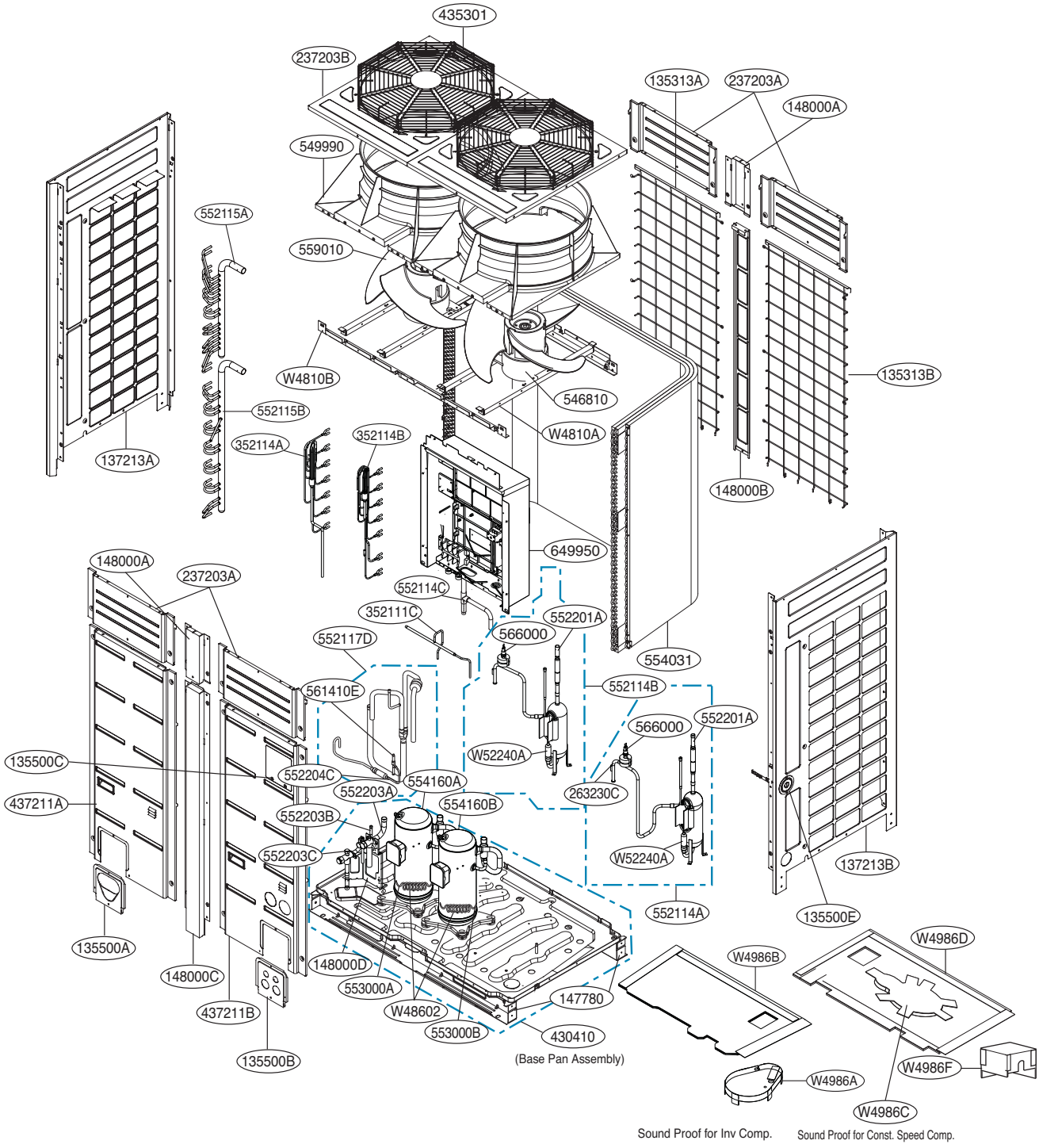

Part	L/No.	Remark
Inv Comp. Heater	553000A	Housing Color : Blue
Const. Speed Comp. Heater	553000B	Housing Color : Yellow
Heater Spring	W48602	-
Const. Speed Comp. Discharge + Low HEX3 Temp. Sensor	263230C	Housing Color : Black

Copyright ©2011 LG Electronics. Inc. All right reserved.
Only for training and service purposes

LGE Internal Use Only

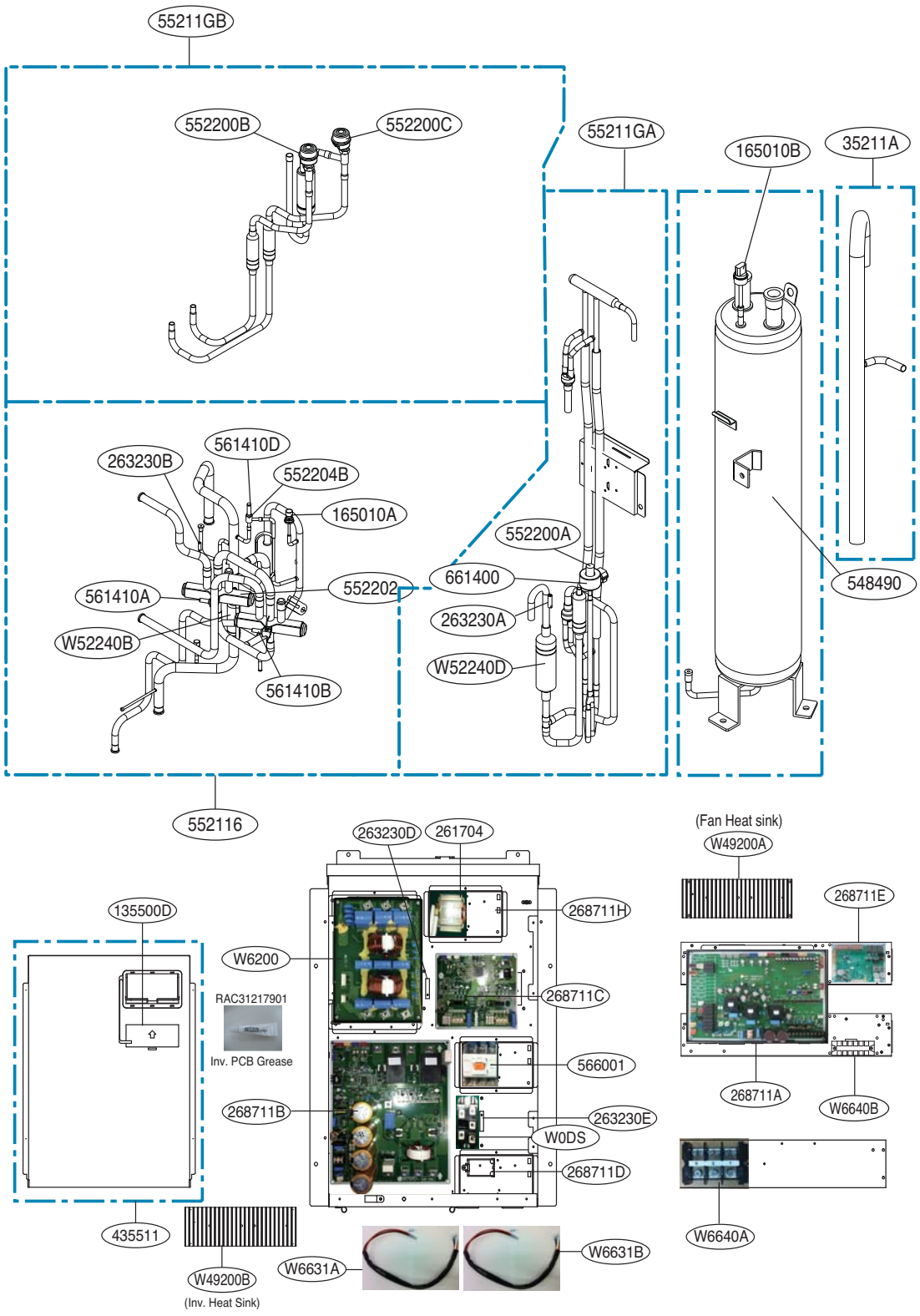

Part	L/No.	Sensor location	Remark
Temp. Sensor 1	263230A	Sub Cool Out + HEX2(Upper Temp. Sensor) + Liquid Pipe	Housing Color : Yellow
Temp. Sensor 2	263230B	Suction Pipe + HEX1(Temp. Sensor) + Inv. Discharge	Housing Color : Purple
Temp. Sensor 3	263230E	Air + Inv. IPM	Housing Color : Green

Copyright ©2011 LG Electronics. Inc. All right reserved.
Only for training and service purposes

LGE Internal Use Only

P/NO : MFL67400002

JULY, 2011